Data Communication
Chapter 8
Multiplexing & Switching

Himal Acharya
Course Instructor

Outline

- Multiplexing types and Application
- Multiplexing vs Non-Multiplexing
- The Telephone System: Analog Services and Its Hierarchy, Digital Services and Hierarchy
- Circuit Switching, Packet Switching, Message Switching
- Private Branch Exchange

Multiplexing

- *Whenever the bandwidth of a medium linking two devices is greater than the bandwidth needs of the devices, the link can be shared. Multiplexing is the set of techniques that allows the (simultaneous) transmission of multiple signals across a single data link. As data and telecommunications use increases, so does traffic.*
- In a multiplexed system, *n* share the bandwidth of one link.
- Multiplexer (MUX)- combines the lines into a single stream (many-to-one)
- At the receiving end, the stream is fed into a demultiplexer (DEMUX), which directs them to their corresponding lines.
- Link refers to the physical path

Multiplexing

- Dividing a link into channels

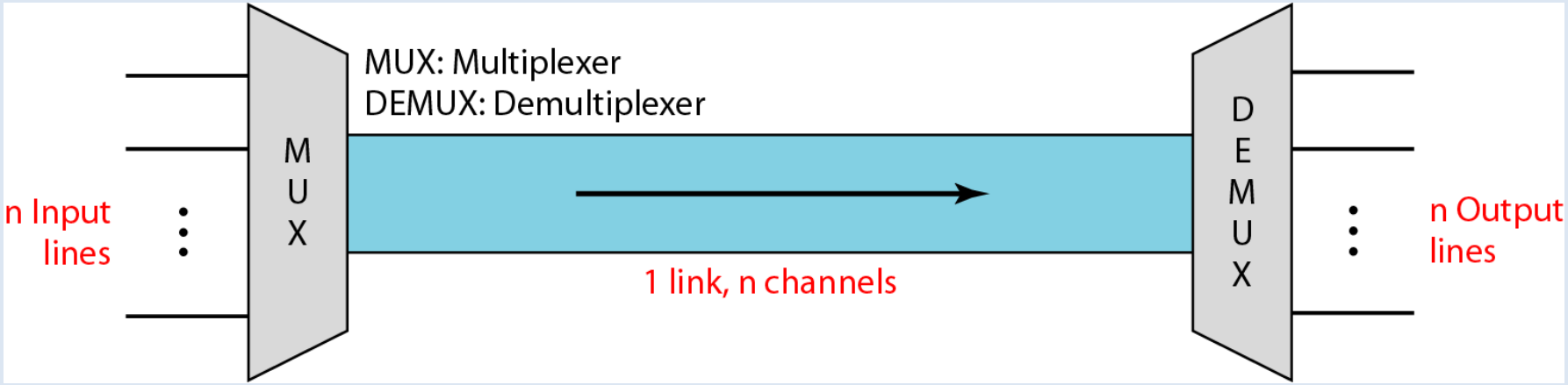

- Categories of multiplexing

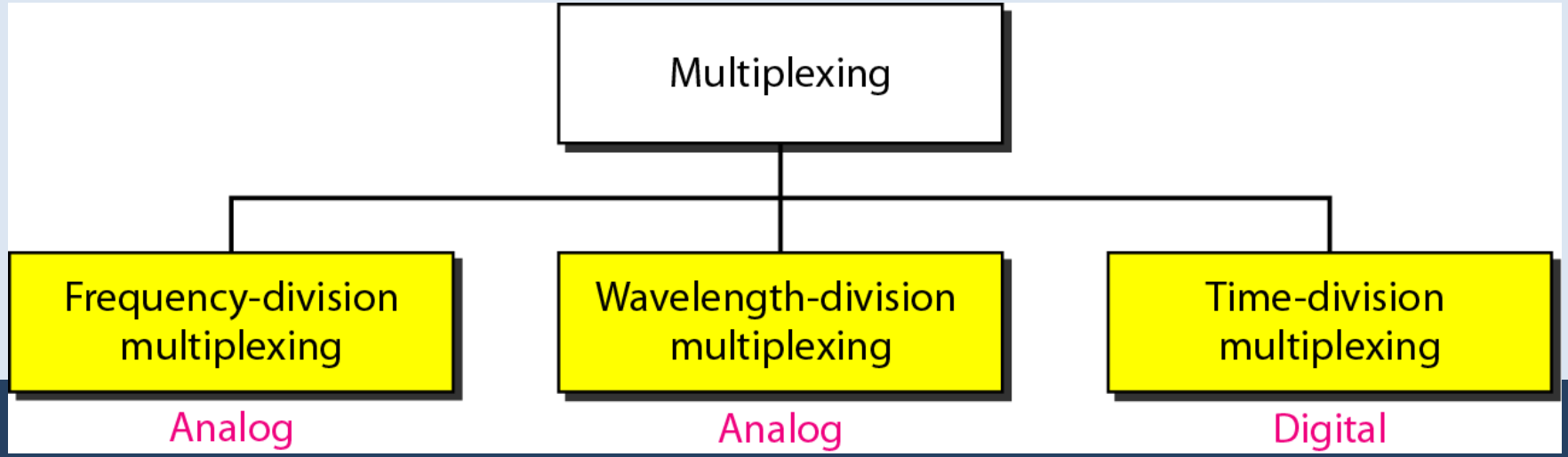

Frequency-division Multiplexing (FDM)

- Frequency-division multiplexing FDM is an analog technique that can be applied when the bandwidth of a link is greater than the combined bandwidths of the signals to be transmitted.
- In FDM, signals are generated by each sending device modulate different carrier frequencies.
- These modulated signals are then combined into a single composite signal that can be transported by the link
- Carrier frequencies are separated by sufficient bandwidth to accommodate the modulated signal.
- Channels can be separated by strips of unused bandwidth- **guard bands**- to prevent signals from overlapping.
- In addition, carrier frequencies must not interfere with the original data frequencies.

Figure *Frequency-division multiplexing (FDM)*

We consider FDM to be an analog multiplexing technique; however, this does not mean that FDM cannot be used to combine sources sending digital signals. A digital signal can be converted to an analog signal

Frequency- division multiplexing

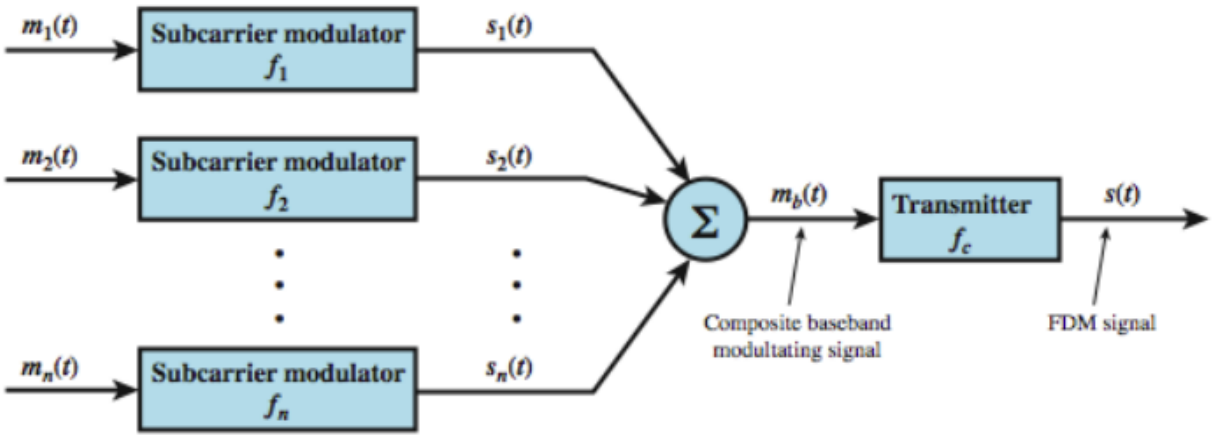

(a) Transmitter

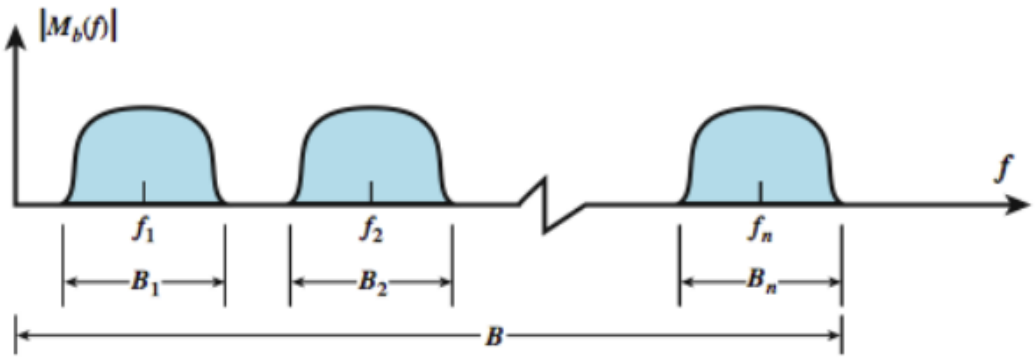

(b) Spectrum of composite baseband modulating signal

- Each user is assigned non-overlapping frequency ranges so that multiple signals can be transmitted. Multiple message signals $\{m_1(t), m_2(t),..,m_n(t)\}$ from multiple sources are modulated over different subcarrier frequencies $(f_1,f_2,f_3,..,f_n)$ and send them to an adder. Now the composite signal is modulated over carrier frequency f_c and transmitted over channel.

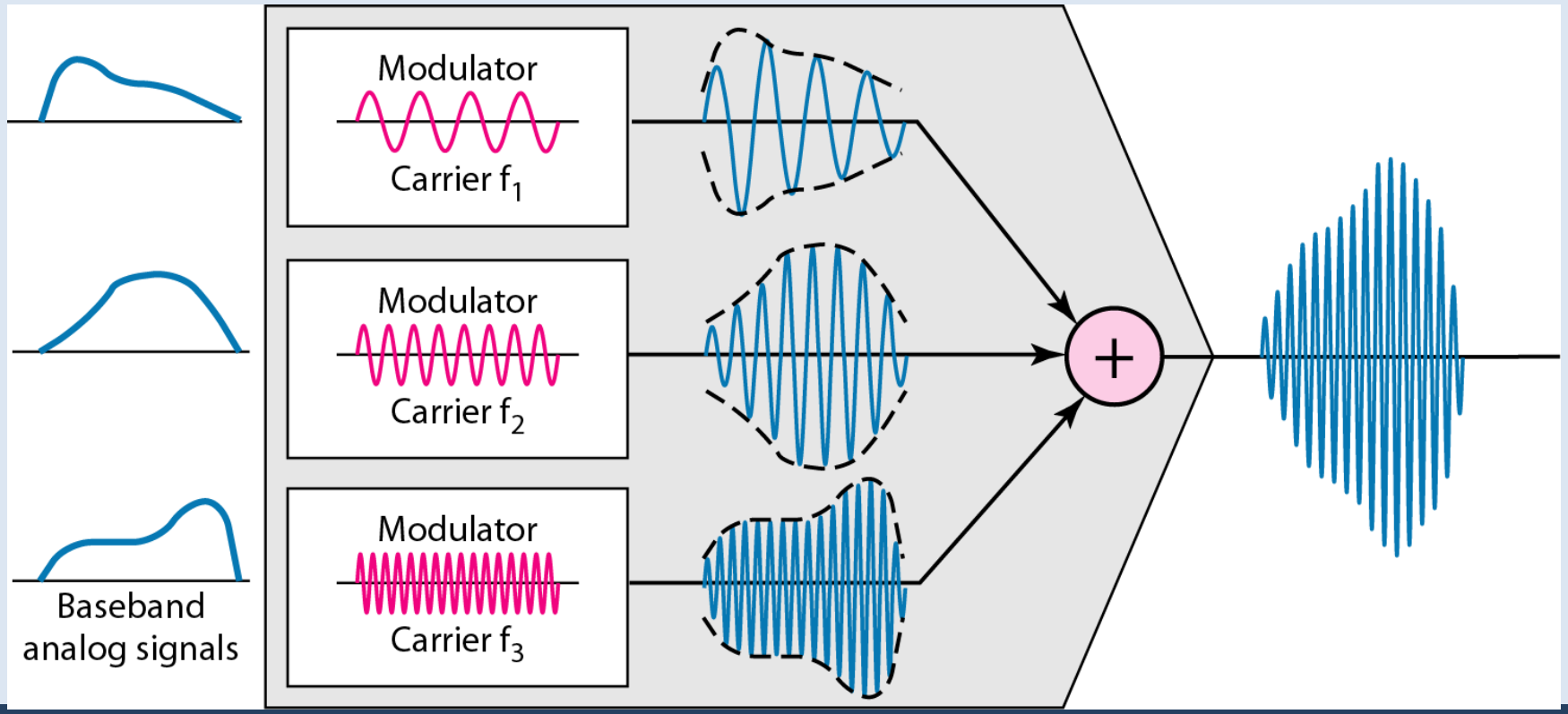

Demultiplexing process

- In FDM receiver we first get the transmitted signal (carrier frequency f_c) and then pass this composite signal through suitable band pass filter. These band pass filters have the same frequency as the subcarriers of FDM transmitters. Now, these signals $s_1, s_2, .., s_n$ are passes through demodulators to get respective message signal.

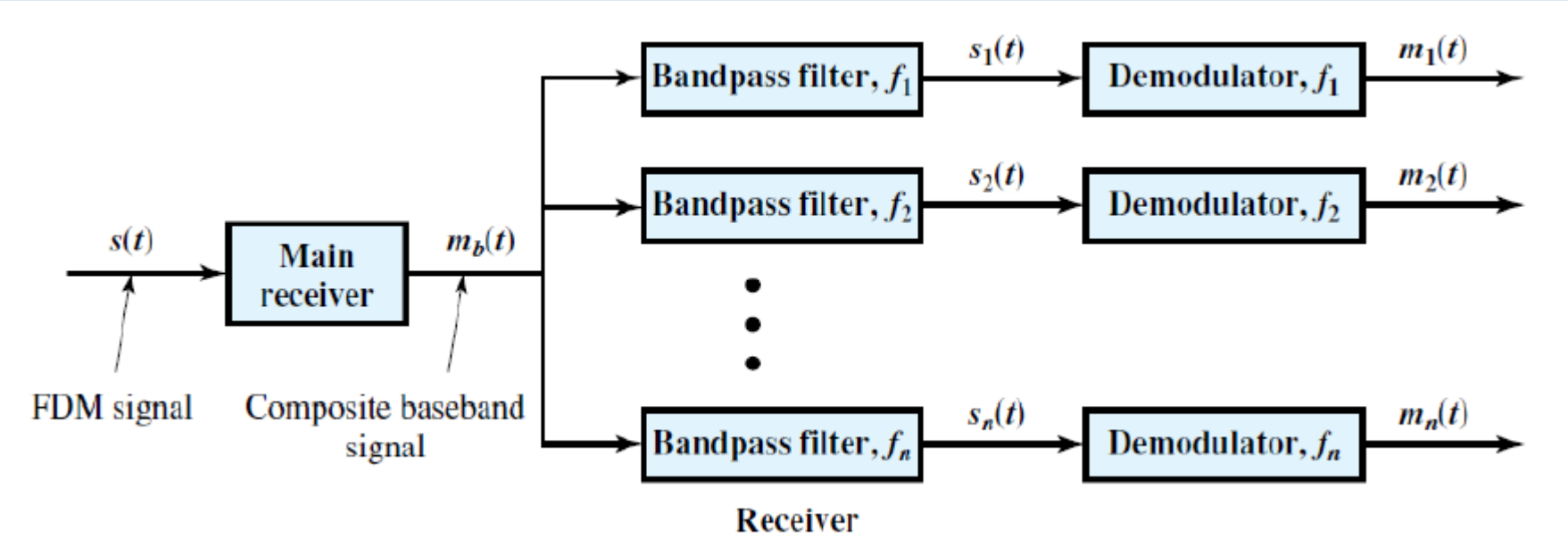

Figure *FDM demultiplexing example*

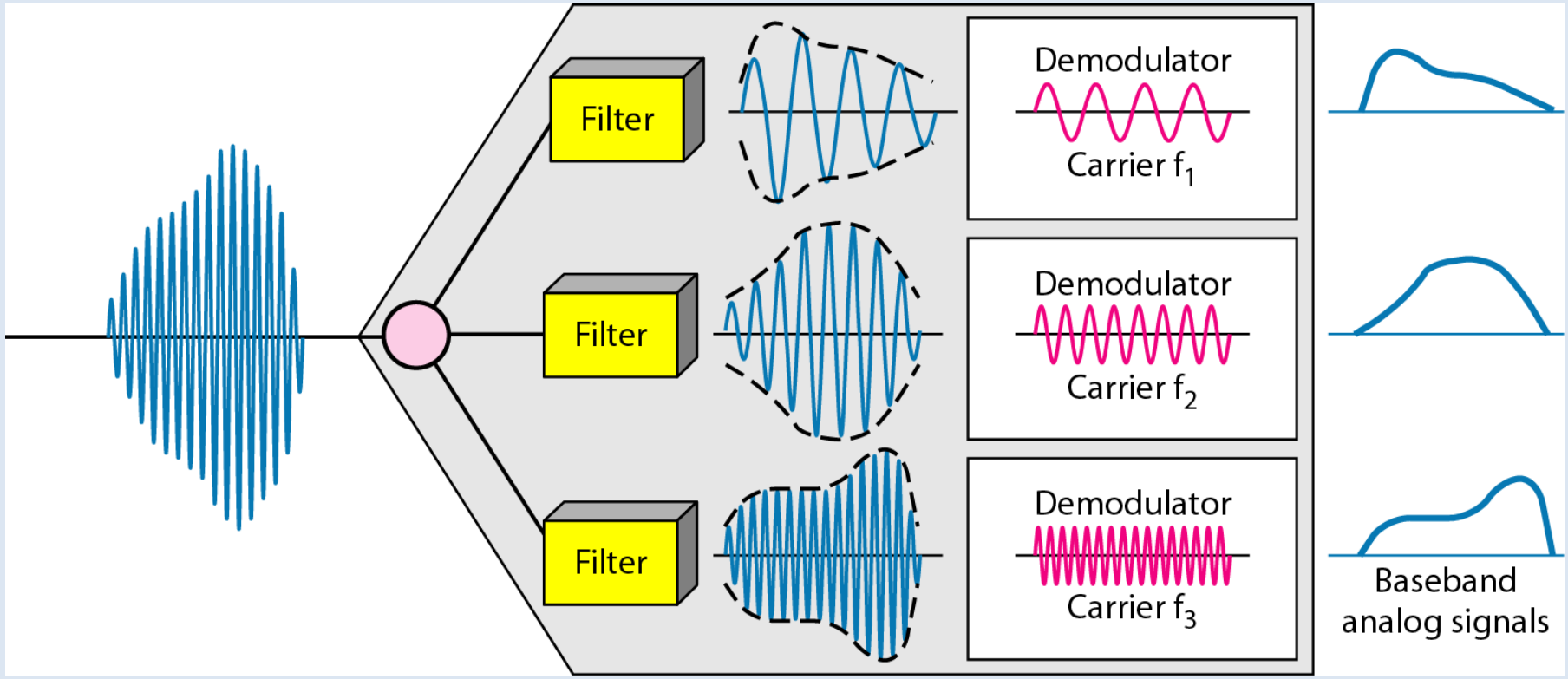

FDM

Advantages

- Doesn't need synchronization between its transmitter and receiver
- Analog signals
- Simpler and easy demodulation

Disadvantages

- The signal in one band may interfere the signal in other band
- If significant nonlinearities in the transmission link, there may be crosstalk among different signals.

Application

- Radio transmissions- Commercial AM and FM
- TV transmissions
- First generation of cellular phones

FDM Example

Assume that a voice channel occupies a bandwidth of 4 kHz. We need to combine three voice channels into a link with a bandwidth of 12 kHz, from 20 to 32 kHz. Show the configuration, using the frequency domain. Assume there are no guard bands.

Solution

- *We shift (modulate) each of the three voice channels to a different bandwidth. We use the 20- to 24-kHz bandwidth for the first channel, the 24- to 28-kHz bandwidth for the second channel, and the 28- to 32-kHz bandwidth for the third one. Then we combine them as shown in Figure*

Figure

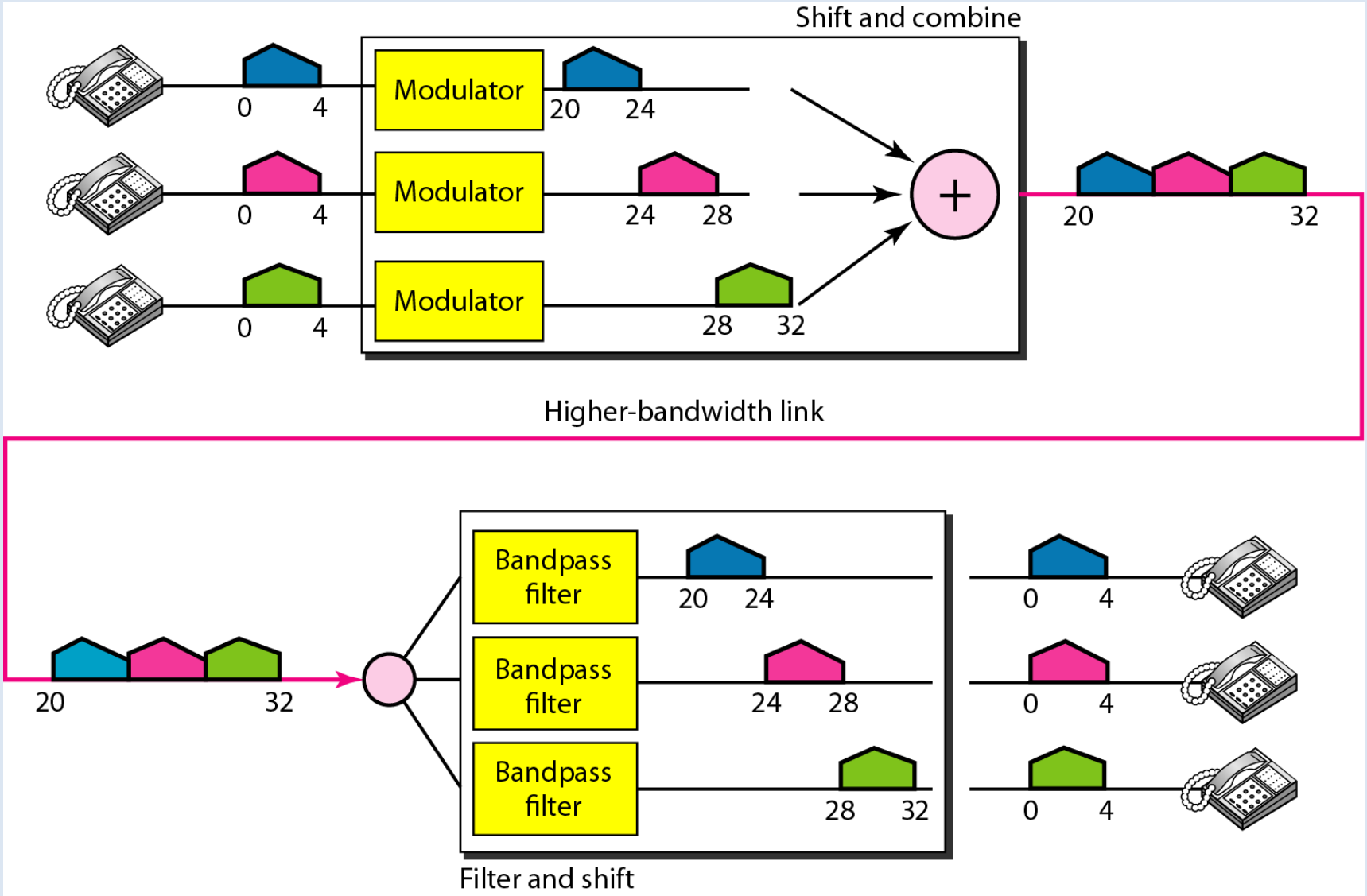
Shift and combine
Modulator
Modulator
Modulator
0
4
0
4
0
4
20
24
24
28
28
32
20
32
Higher-bandwidth link
20
32
Bandpass filter
Bandpass filter
Bandpass filter
20
24
24
28
28
32
0
4
0
4
0
4
Filter and shift

Example

Five channels, each with a 100-kHz bandwidth, are to be multiplexed together. What is the minimum bandwidth of the link if there is a need for a guard band of 10 kHz between the channels to prevent interference?

Solution

For five channels, we need at least four guard bands. This means that the required bandwidth is at least

$$5 \times 100 + 4 \times 10 = 540 \text{ kHz},$$

as shown in Figure

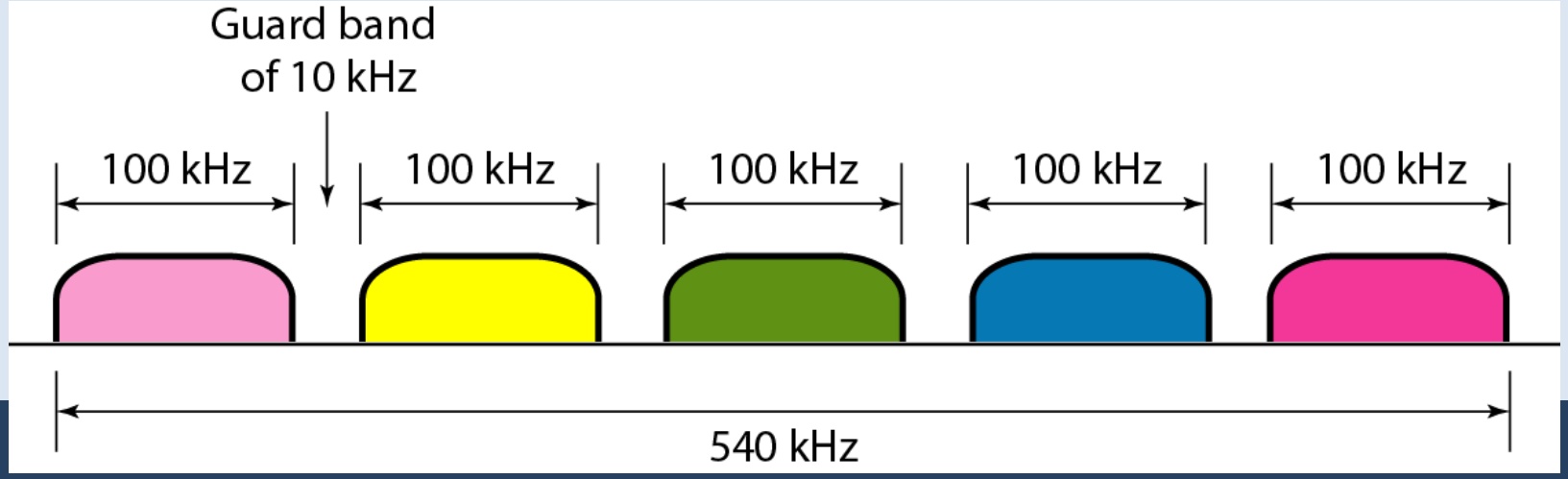

Numerical

Assume that a voice channel occupies a bandwidth of 4 KHz. We need to multiplex 10 voice channels with guard bands of 500 Hz using FDM. Determine the bandwidth of the link. Also show the multiplexing scheme diagrammatically.

- *Solution*

For ten channels, we need at least nine guard bands. This means that the required bandwidth is at least

$$10 \times 4000 + 9 \times 500 = 44{,}500 \text{ Hz} = 44.5 \text{ KHz}$$

Multiplexing scheme figure in lecture class

Wavelength-Division Multiplexing (WDM)

- WDM is designed to use the high-data-rate capability of optical fibre.
- The optical fiber data rate is higher than the data rate of metallic transmission cable, but using a fiber-optic cable for a single line wastes the available bandwidth.
- WDM is conceptually the same as FDM, except that the multiplexing and demultiplexing involve optical signals transmitted through fiber-optic channels.
- The difference is that the frequencies are very high.

WDM is an analog multiplexing technique to combine optical signals.

Figure *Prisms in wavelength-division multiplexing and demultiplexing*

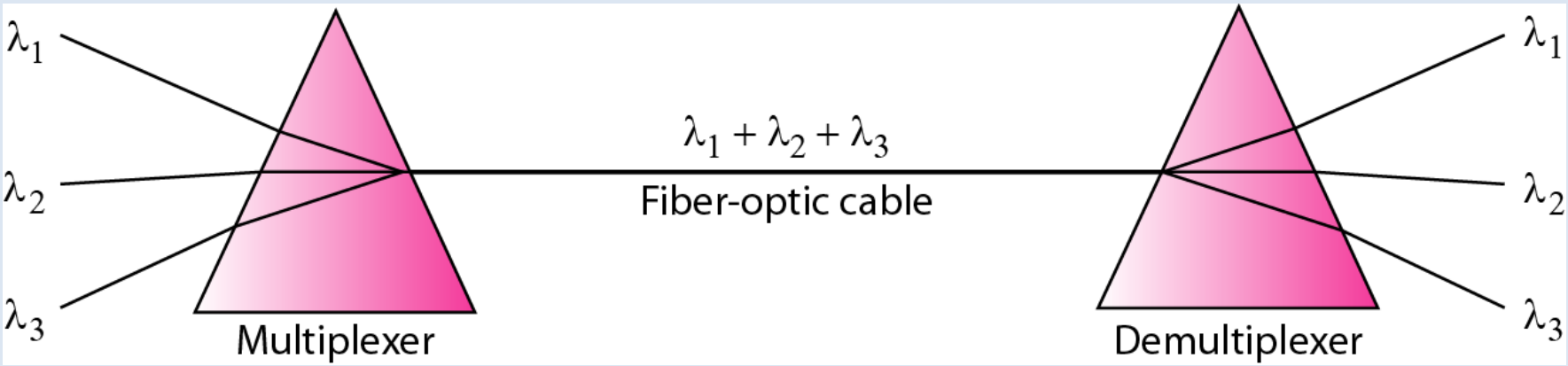

Using this technique, a multiplexer can be made to combine several input beams of light, each containing a narrow band of frequencies, into one output beam of a wider band of frequencies. A demultiplexer can also be made to reverse the process

WDM systems operate in the 1550-nm range with 200 GHz of each channel but today most WDM systems use 50-GHz spacing

Application:
SONET network

Time Division Multiplexing (TDM)

- **Time-division multiplexing (TDM)** is a digital process that allows several connections to share the high bandwidth of a link.
- TDM is a digital multiplexing technique for combining several low-rate digital channels into one high-rate one.
- The sources that can produce analog data; analog data can be sampled, changed to digital data, and then multiplexed by using TDM.

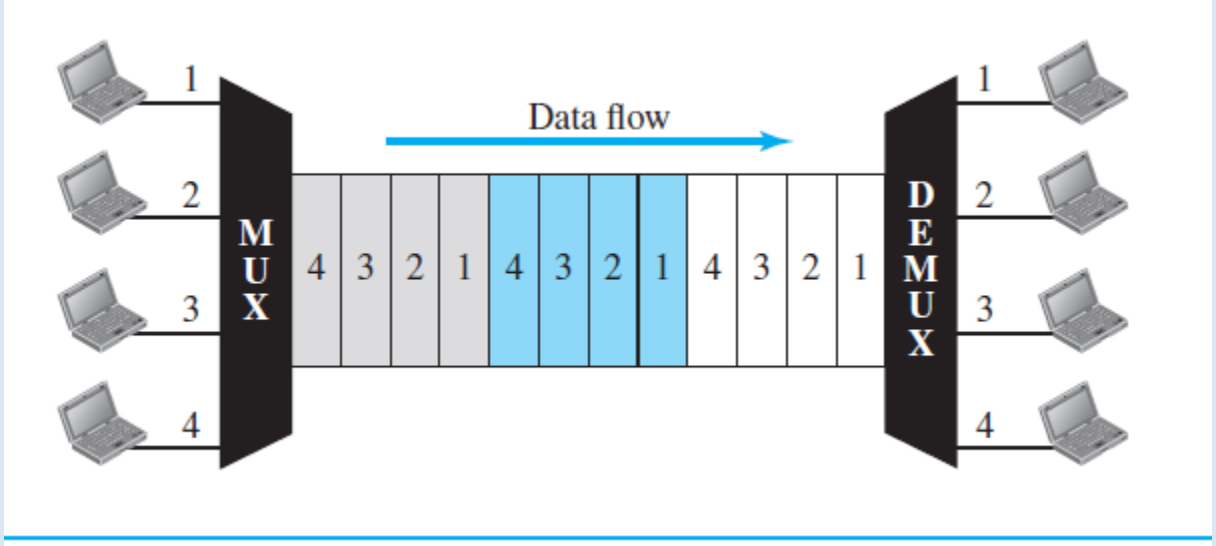

TDM

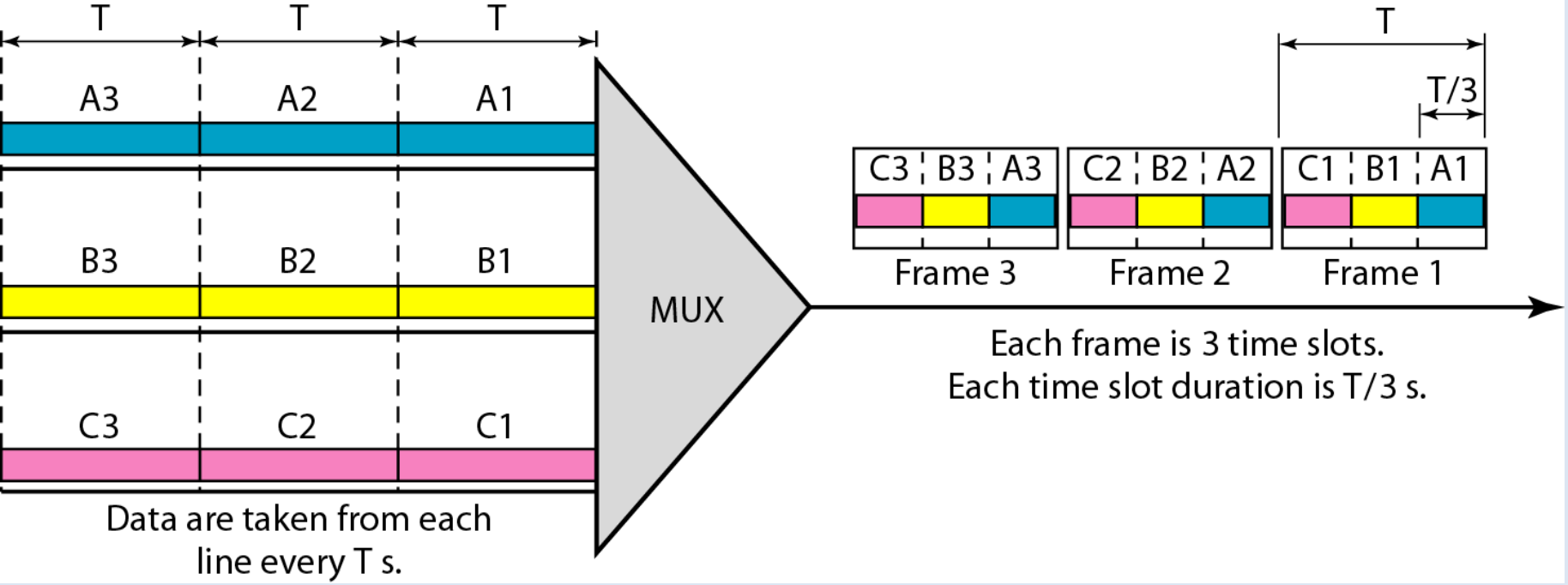
T
T
T
A3
A2
A1
B3
B2
B1
C3
C2
C1
Data are taken from each line every T s.
MUX
T
T/3
C3 B3 A3
C2 B2 A2
C1 B1 A1
Frame 3
Frame 2
Frame 1
Each frame is 3 time slots.
Each time slot duration is T/3 s.

TDM System Overview- Transmitter

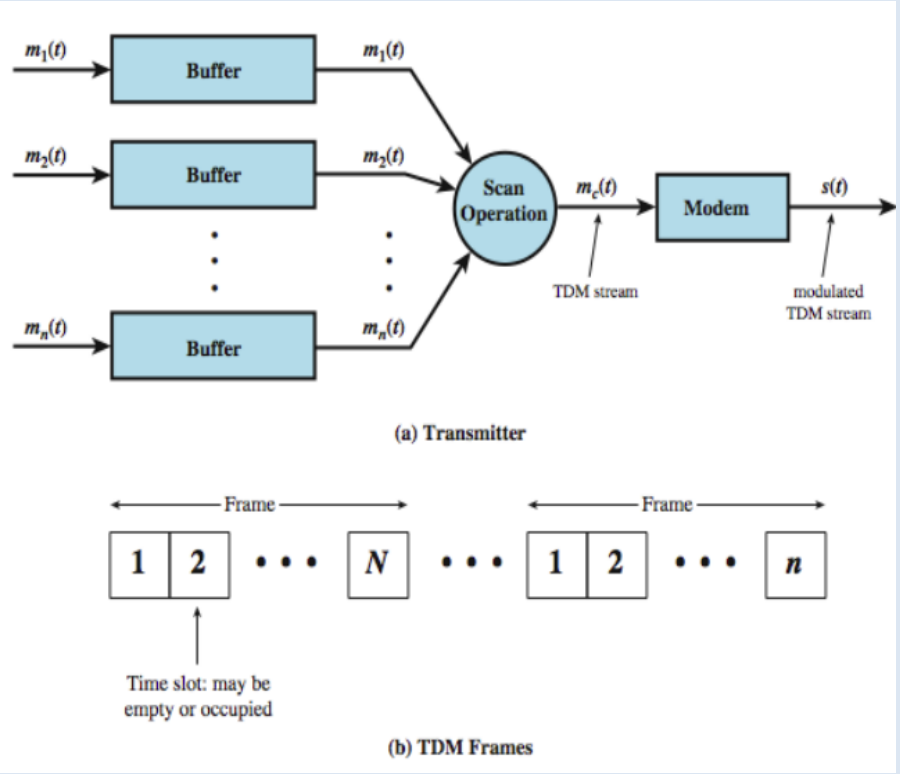

- A number of signals [$m_i(t)$, $i = 1, \cdots, n$] are to be multiplexed onto the same transmission medium
- The signals carry digital data and are generally digital signals
- The incoming data from each source are briefly buffered
- The buffers are scanned sequentially to form a composite digital data stream $m_c(t)$
- The scan operation is sufficiently rapid so that each buffer is emptied before more data can arrive
- The data rate of $m_c(t)$ must at least equal the sum of the data rates of $m_i(t)$.
- The digital signal $m_c(t)$ may be transmitted directly, or passed through a modem so that an analog signal is transmitted

TDM Receiver

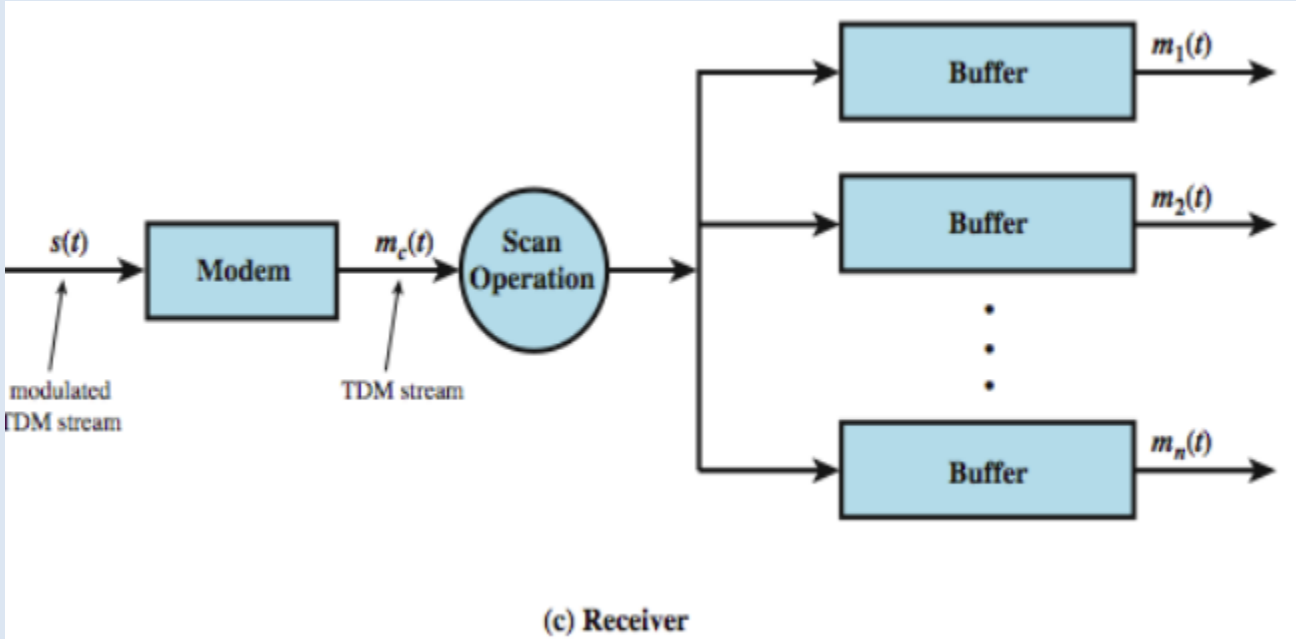

(c) Receiver

Types of TDM

1) Synchronous

- Each input connection has an allotment in the output even if it is not sending data
- Inefficient if some input lines have no data to send

2) Statistical

- Doesn't assign specific time slots for each device.
- Uses dynamic time slot lengths that are variable. Only when an input line has a slot's worth of data to send is it given a slot in the output frame.
- The number of slots in each frame is less than the number of input lines. The multiplexer checks each input line in roundrobin fashion; it allocates a slot for an input line if the line has data to send; otherwise, it skips the line and checks the next line.

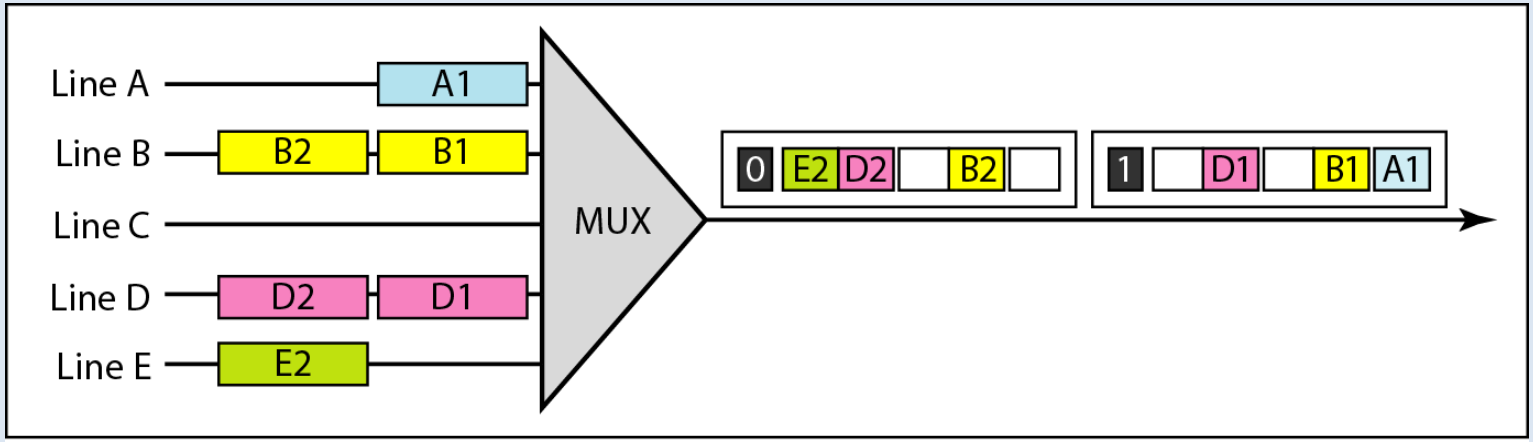

a. Synchronous TDM

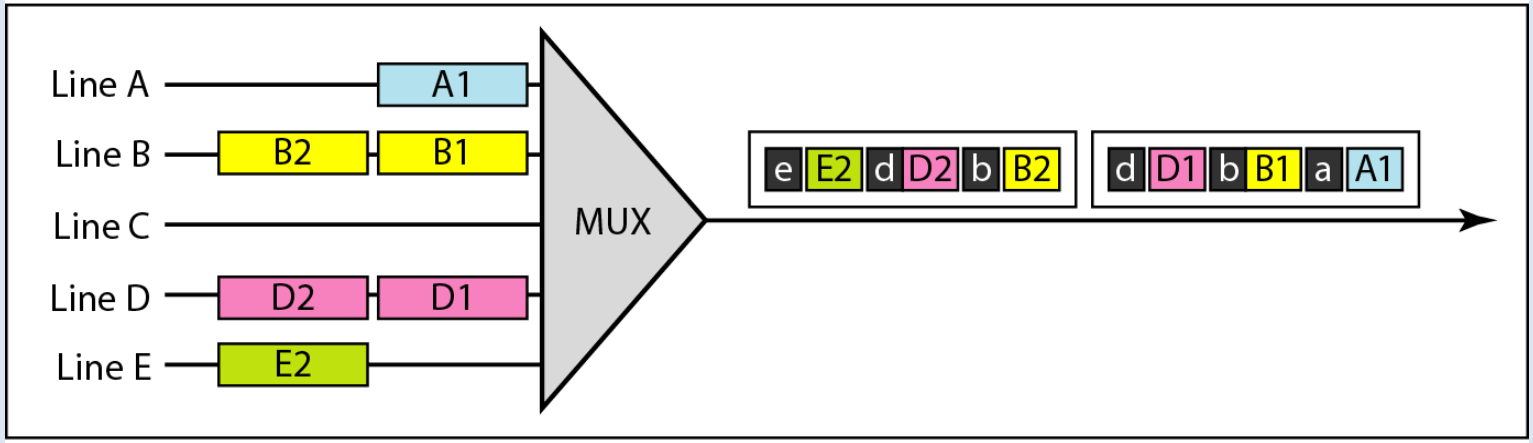

b. Statistical TDM

Advantages:

- TDM systems are more flexible than frequency division multiplexing.
- Time division multiplexing circuitry is not complex.
- Problem of cross talk is not severe.
- Full available channel bandwidth can be utilized for each channel.

Disadvantage:

- Synchronization is required in time division multiplexing
- Complex to implement.

Applications:

a) ISDN

b) PSTN

Telephone System

- Human operators intelligent & flexible But expensive and not always discreet
- Strowger invented automated switch in 1888
- Decimal telephone numbering system
- Hierarchical network structure simplifies routing

Area code, exchange (CO), station number

613 345 6789

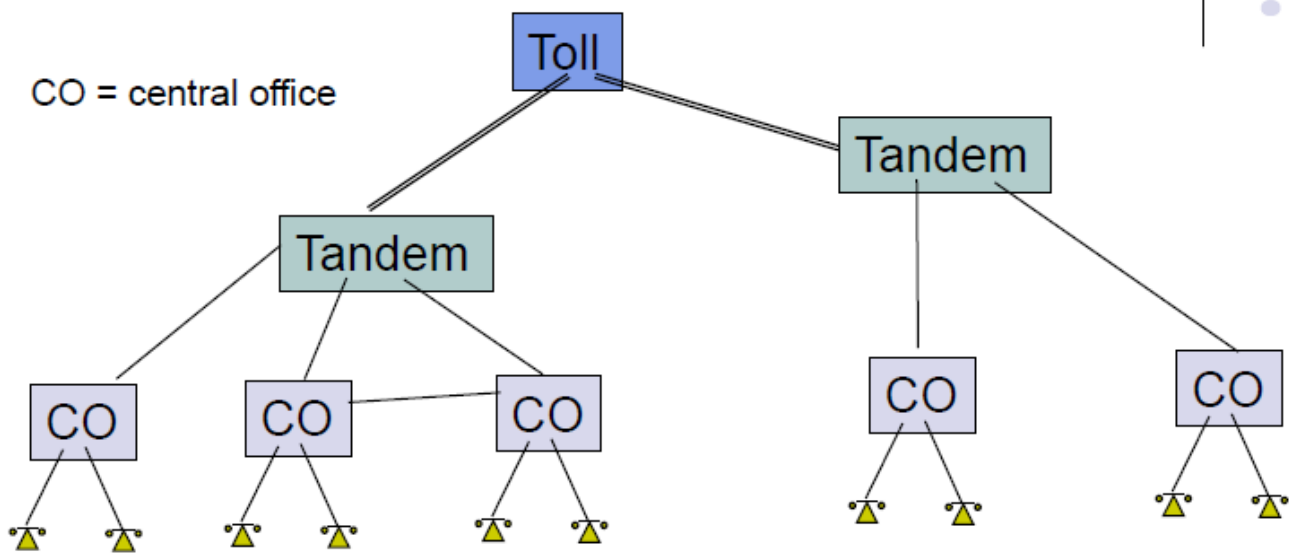

Telephone subscribers connected to local CO (central office)

Tandem & Toll switches connect CO's

Three Phases of a Connection

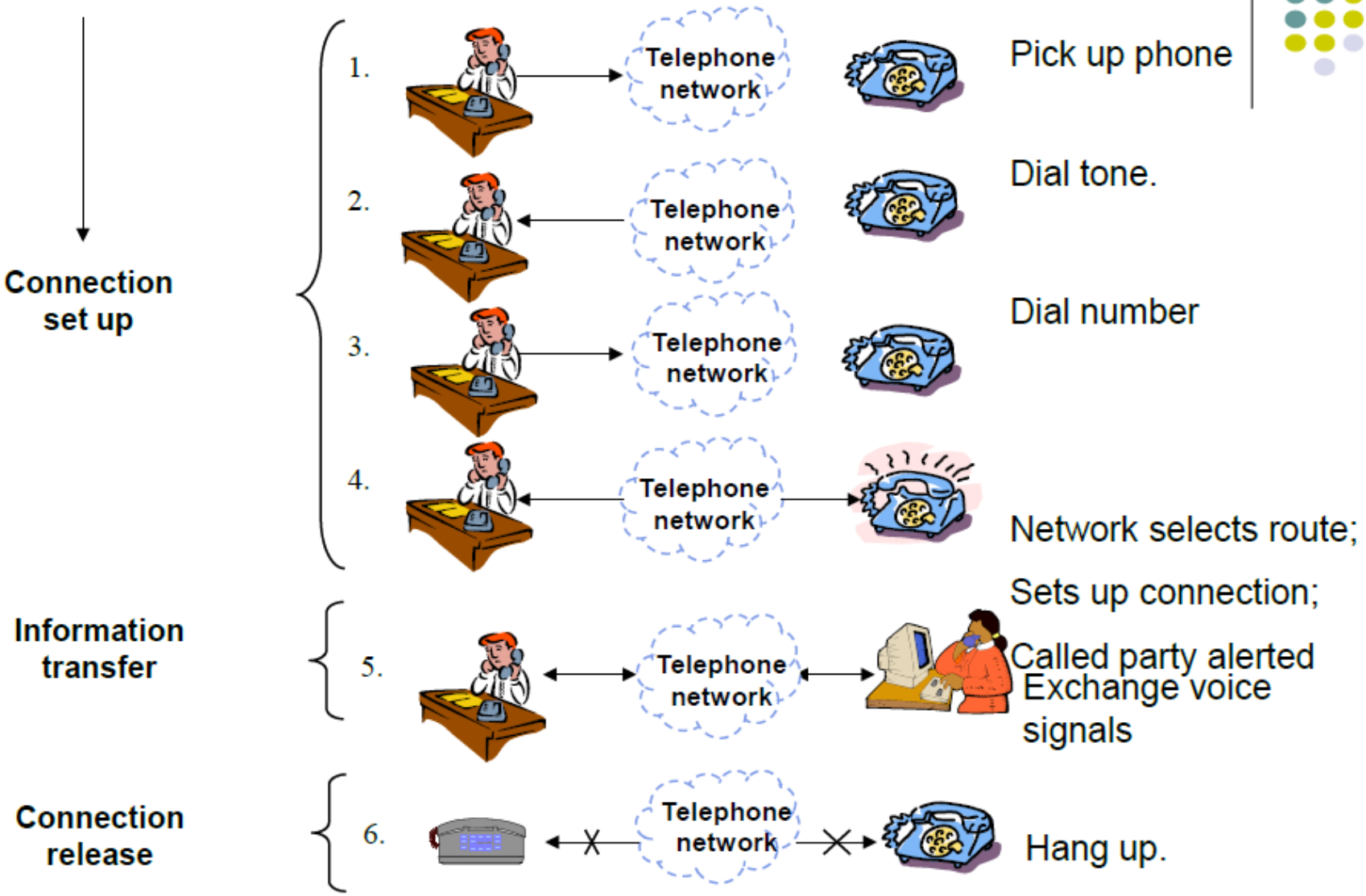

Telephone System

- Analog (FDM) Hierarchy
- Digital (TDM) Hierarchy

Analog (FDM) Hierarchy

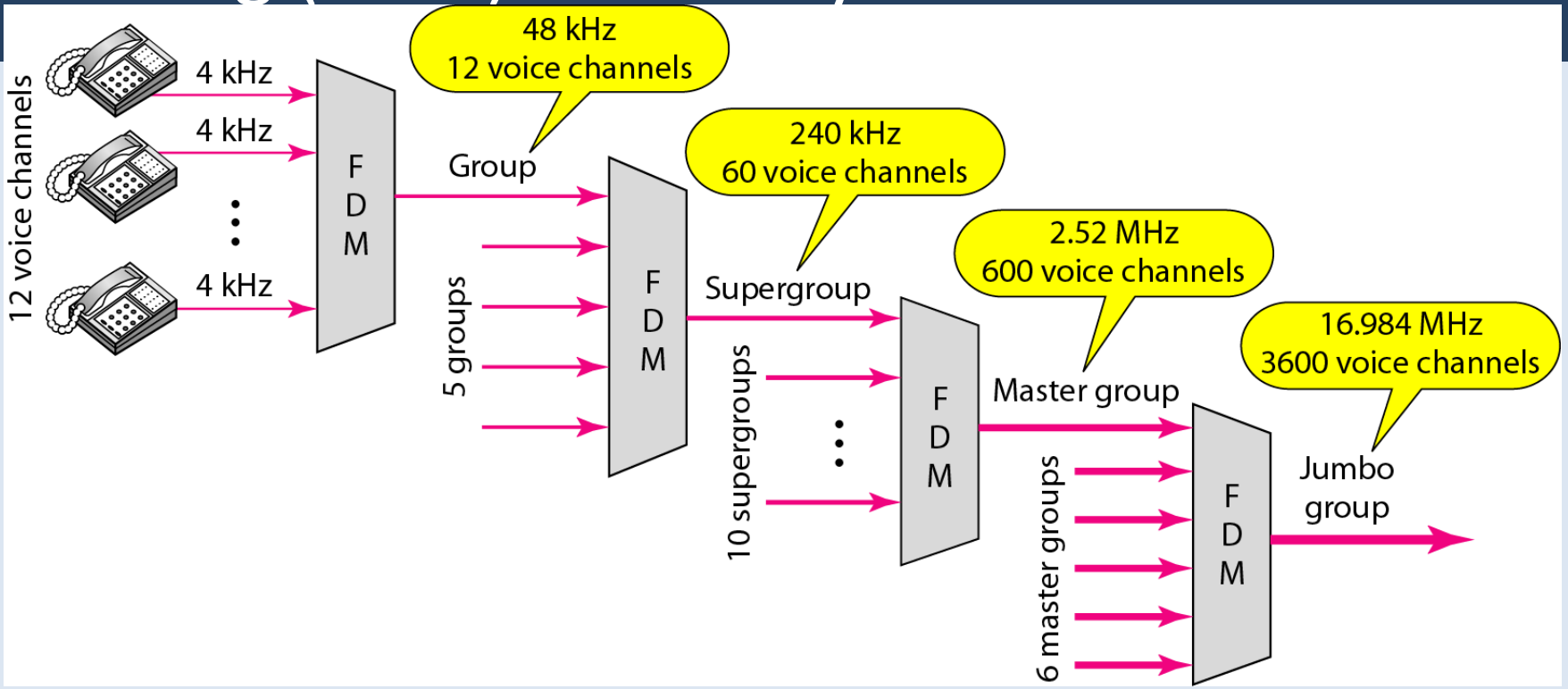

- To maximize the efficiency of their infrastructure, telephone companies have traditionally multiplexed signals from lower-bandwidth lines onto higher-bandwidth lines.
- In this way, many switched or leased lines can be combined into fewer but bigger channels.
- For analog lines, FDM is used.

Analog FDM Hierarchy

- One of these hierarchical systems used by telephone companies is made up of groups, supergroups, master groups, and jumbo groups.
- In this **analog hierarchy,** 12 voice channels are multiplexed onto a higher-bandwidth line to create a **group.** A group has 48 kHz of bandwidth and supports 12 voice channels.
- At the next level, up to five groups can be multiplexed to create a composite signal called a **supergroup.** A supergroup has a bandwidth of 240 kHz and supports up to 60 voice channels. Supergroups can be made up of either five groups or 60 independent voice channels.
- At the next level, 10 supergroups are multiplexed to create a **master group.** A master group must have 2.40 MHz of bandwidth, but the need for guard bands between the supergroups increases the necessary bandwidth to 2.52 MHz. Master groups support up to 600 voice channels.
- Finally, six master groups can be combined into a **jumbo group.** A jumbo group must have 15.12 MHz (6 · 2.52 MHz) but is augmented to 16.984 MHz to allow for guard bands between the master groups.

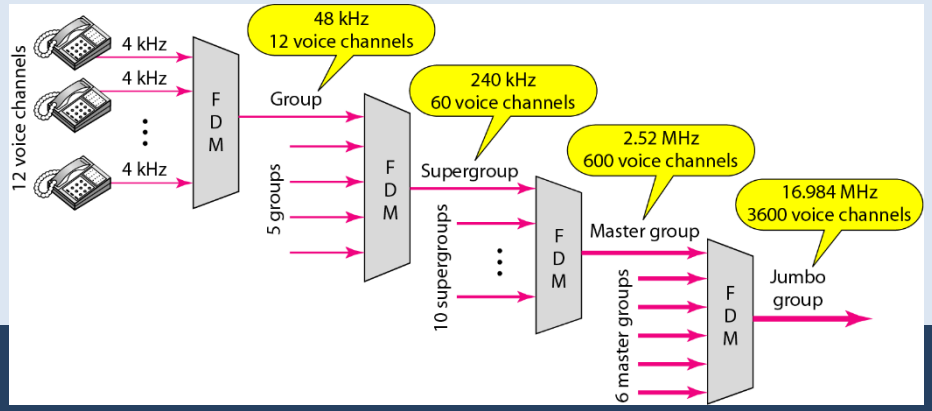

North American Digital TDM Hierarchy

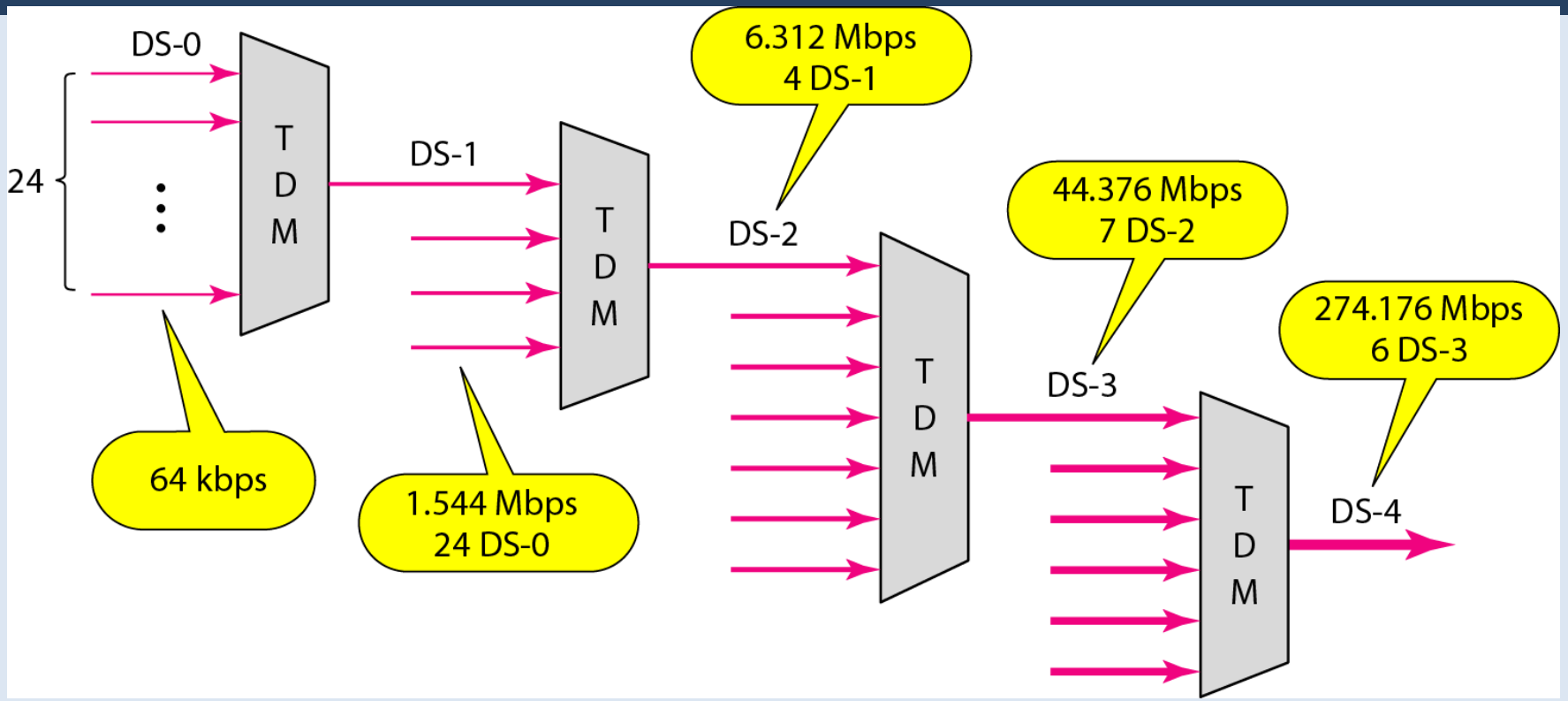

T1 Frame – North American Standard adopted also in Japan, Korea

- **DS-0** is a single digital channel of 64 kbps.
- **DS-1** is a 1.544-Mbps service; 1.544 Mbps is 24 times 64 kbps plus 8 kbps of overhead. It can be used as a single service for 1.544-Mbps transmissions, or it can be used to multiplex 24 DS-0 channels or to carry any other combination desired by the user that can fit within its 1.544-Mbps capacity.
- **DS-2** is a 6.312-Mbps service; 6.312 Mbps is 96 times 64 kbps plus 168 kbps of overhead. It can be used as a single service for 6.312-Mbps transmissions; or it can be used to multiplex 4 DS-1 channels, 96 DS-0 channels, or a combination of these service types.
- **DS-3** is a 44.376-Mbps service; 44.376 Mbps is 672 times 64 kbps plus 1.368 Mbps of overhead. It can be used as a single service for 44.376-Mbps transmissions; or it can be used to multiplex 7 DS-2 channels, 28 DS-1 channels, 672 DS-0 channels, or a combination of these service types.
- **DS-4** is a 274.176-Mbps service; 274.176 is 4032 times 64 kbps plus 16.128 Mbps of overhead. It can be used to multiplex 6 DS-3 channels, 42 DS-2 channels, 168 DS-1 channels, 4032 DS-0 channels, or a combination of these service types.

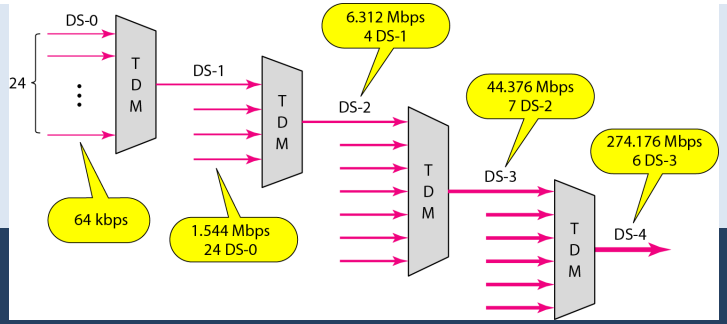

Table *DS and T line rates*

Service	*Line*	*Rate (Mbps)*	*Voice Channels*
DS-1	T-1	1.544	24
DS-2	T-2	6.312	96
DS-3	T-3	44.736	672
DS-4	T-4	274.176	4032

DS-0, DS-1, and so on are the names of services. To implement those services, the telephone companies use **T lines** (T-1 to T-4). These are lines with capacities precisely
matched to the data rates of the DS-1 to DS-4 services

The T-1 line is used to implement DS-1; T-2 is used to implement DS-2; and so on. As you can see from Table, DS-0 is not actually offered as a service, but it has been defined as a basis for reference purposes.. So far only T-1 and T-3 lines are commercially available.

CCITT Digital Hierarchy: European

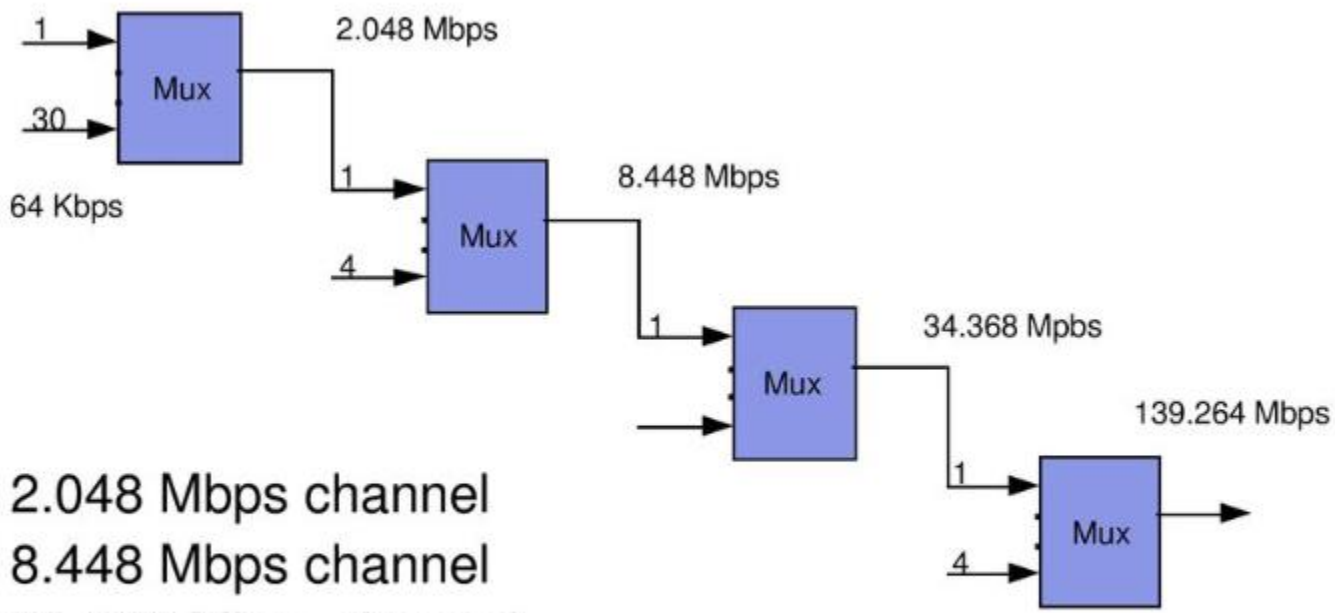

- E1, 2.048 Mbps channel
- E2, 8.448 Mbps channel
- E3, 34.368 Mbps channel
- E4, 139.264 Mbps channel

CCITT Digital Hierarchy: European

E line rates

Line	*Rate (Mbps)*	*Voice Channels*
E-1	2.048	30
E-2	8.448	120
E-3	34.368	480
E-4	139.264	1920

Note:

4 x 2.048 = 8.192 Mbps < 8.448 Mbps. So, OH has been added.

MUX Hierarchy

1st Level	24 (T1)	1.544 Mbps Frame	30 (E1)	2.048 Mbps
2nd Level	4 T1 (T2)	6.312 Mbps Multiframe	4 E1 (E2)	8.448 Mbps
3rd Level	7 T2 (T3)	44.736 Mbps Super frame	4 E2 (E3)	34.368 Mbps
4th Level	6 T3 (T4)	274.176 Mbps Hyperframe	4 E3 (E4)	139.264 Mbps

Switching

- Whenever we have multiple devices, we have the problem of how to connect them to make one-to-one communication possible.
- A better solution is **switching**
- A switched network consists of a series of interlinked nodes, called ***switches*.**
- Switches are devices capable of creating temporary connections between two or more devices linked to the switch
- In a switched network, some of these nodes are connected to the end systems (computers or telephones, for example). Others are used only for routing..

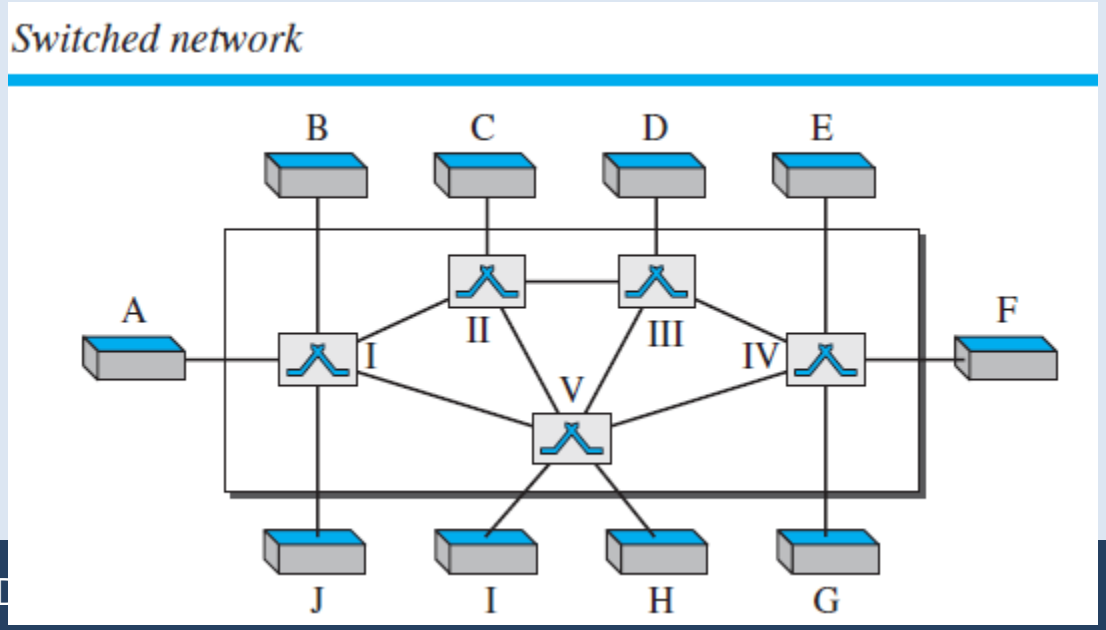

Taxonomy of Switched Networks

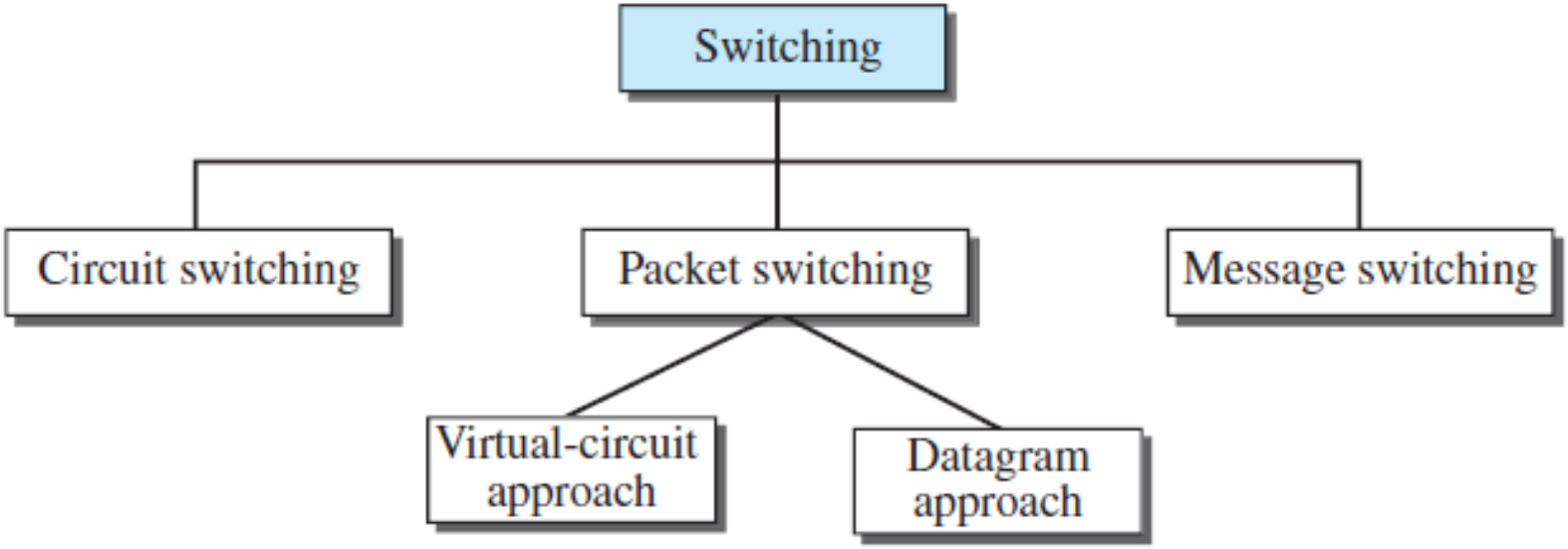

Circuit-Switched Network

- A **circuit-switched network** consists of a set of switches connected by physical links.
- A connection between two stations is a dedicated path made of one or more links. However, each connection uses only one dedicated channel on each link.
- Each link is normally divided into *n* channels by using FDM or TDM
- In circuit switching, route selected during connection setup
- Once set up, the circuit is dedicated to the two nodes will remain to exist until the connection is transmitted

Three Phases

i) Connection Set up – Dedicated channel

ii) Information Transfer – two parties can transfer data

iii) Connection release – A signal is sent to each switch to release resources if when one of the parties need to disconnect

Three Phases of a Connection

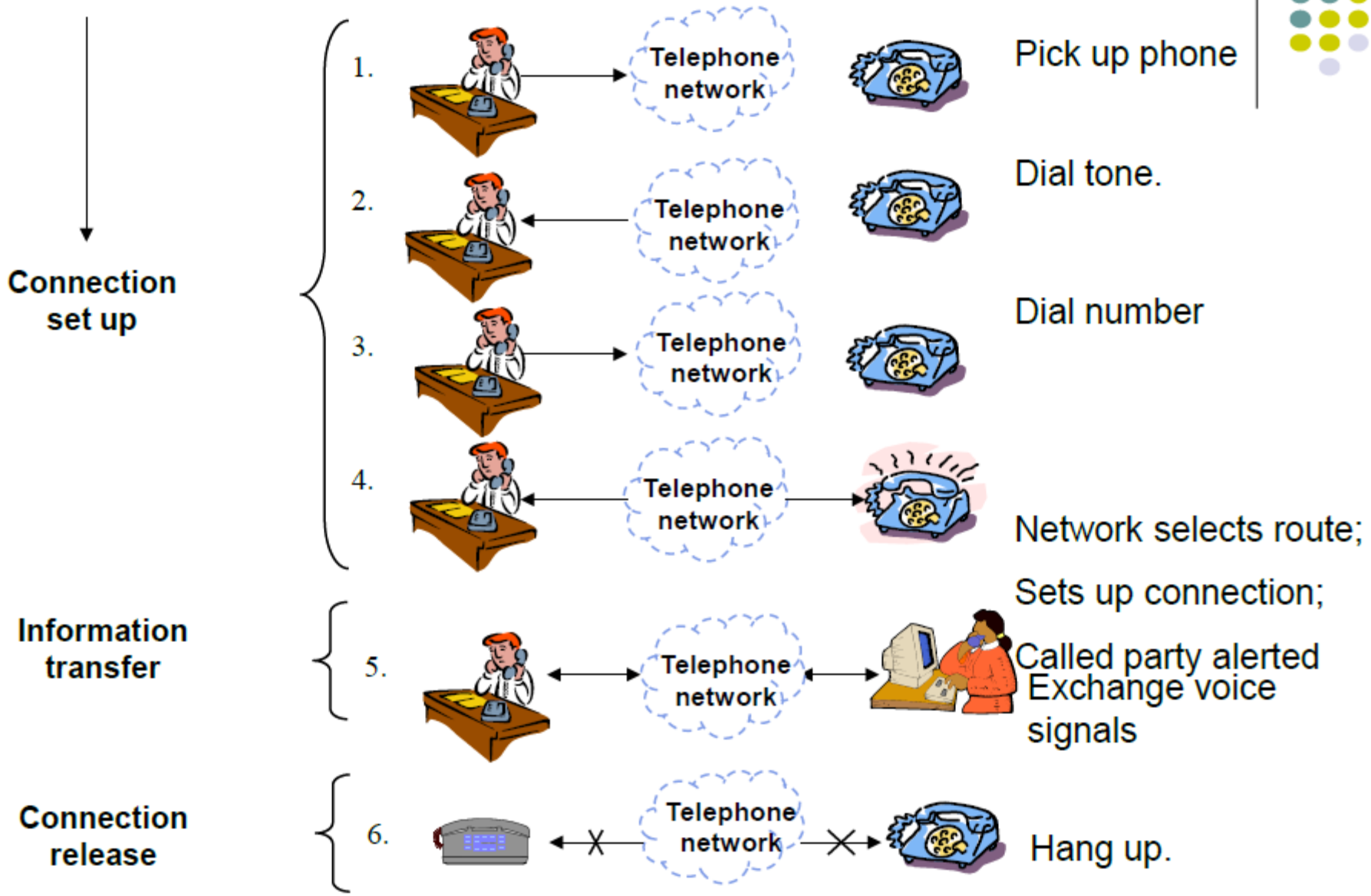

Circuit Switching

Computer Connection Control

- A computer controls connection in telephone switch
- Computers exchange *signaling messages* to:
  - Coordinate setup of telephone connections
  - To implement new services such as caller ID, voice mail, . . .
  - To enable *mobility and roaming in* cellular networks
- "Intelligence" inside the network
- A separate *signaling network* is required

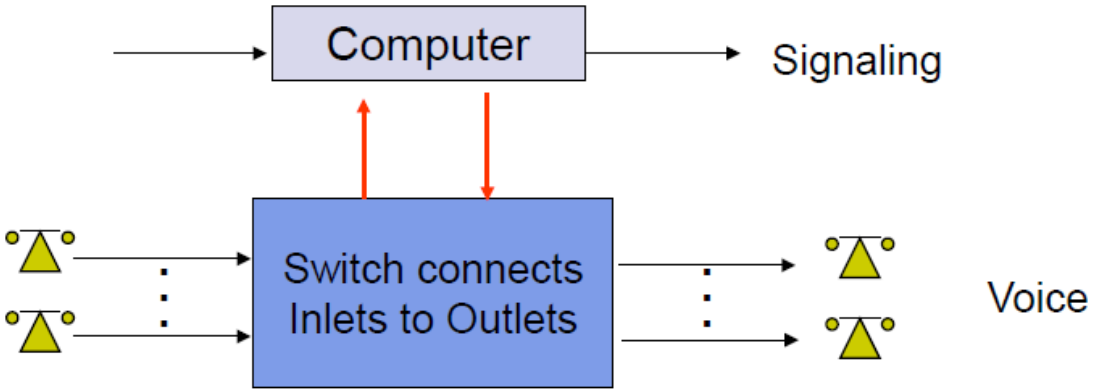

Circuit Switching

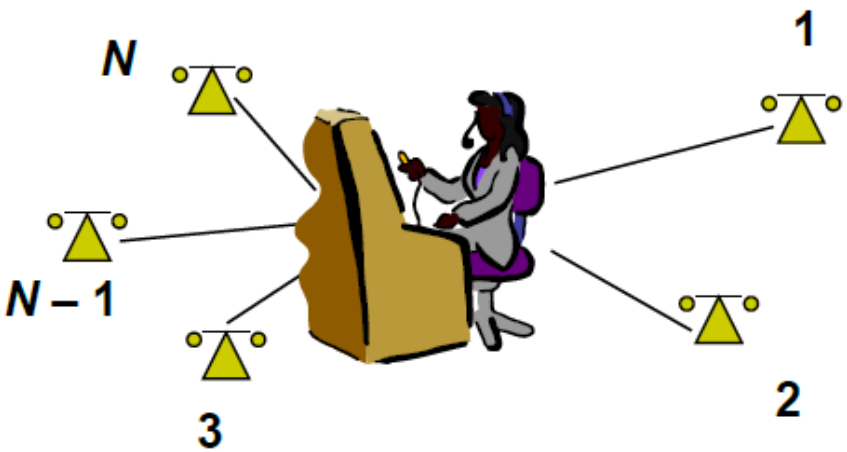

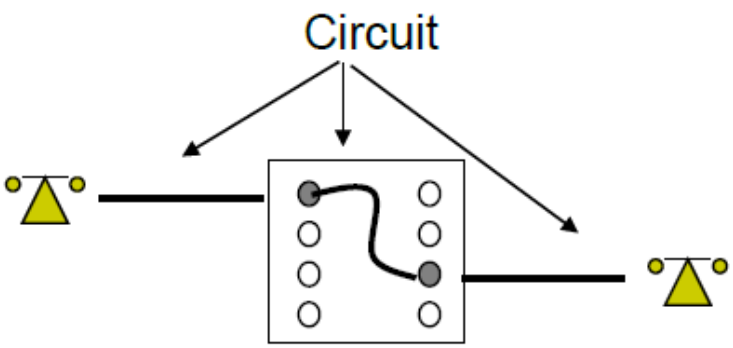

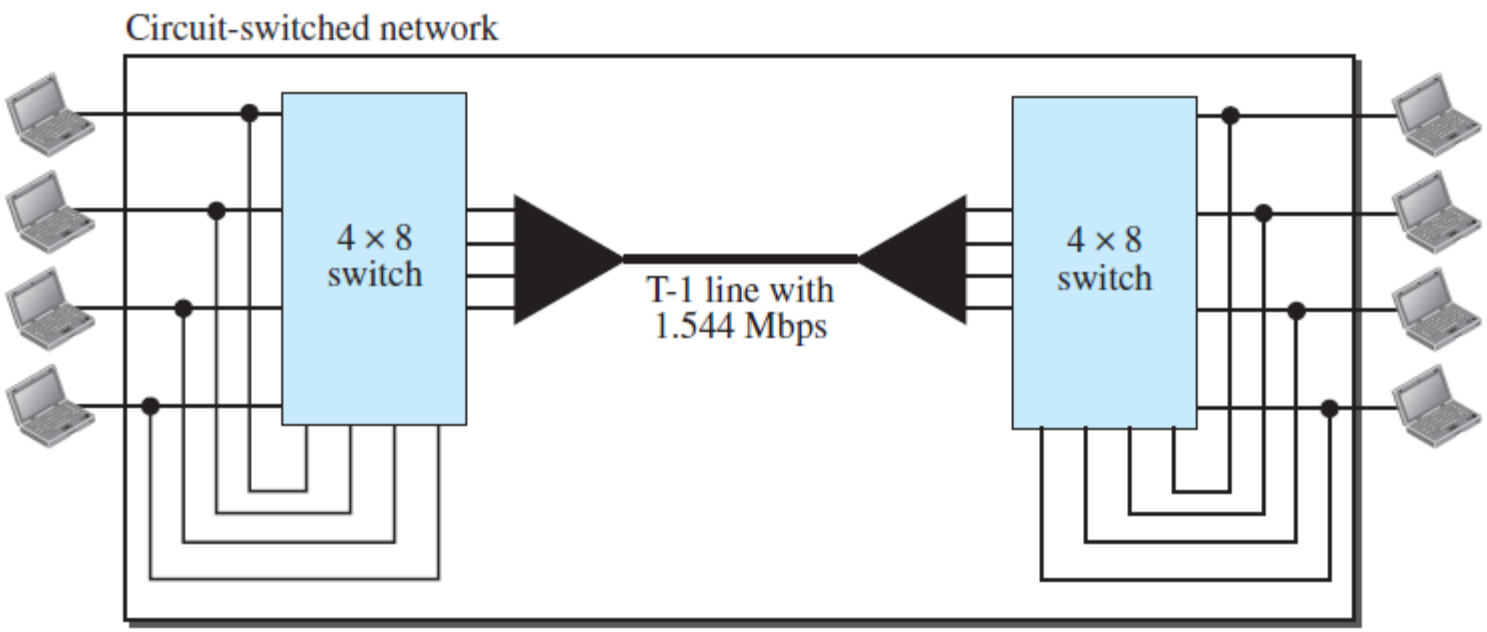

Circuit Switching

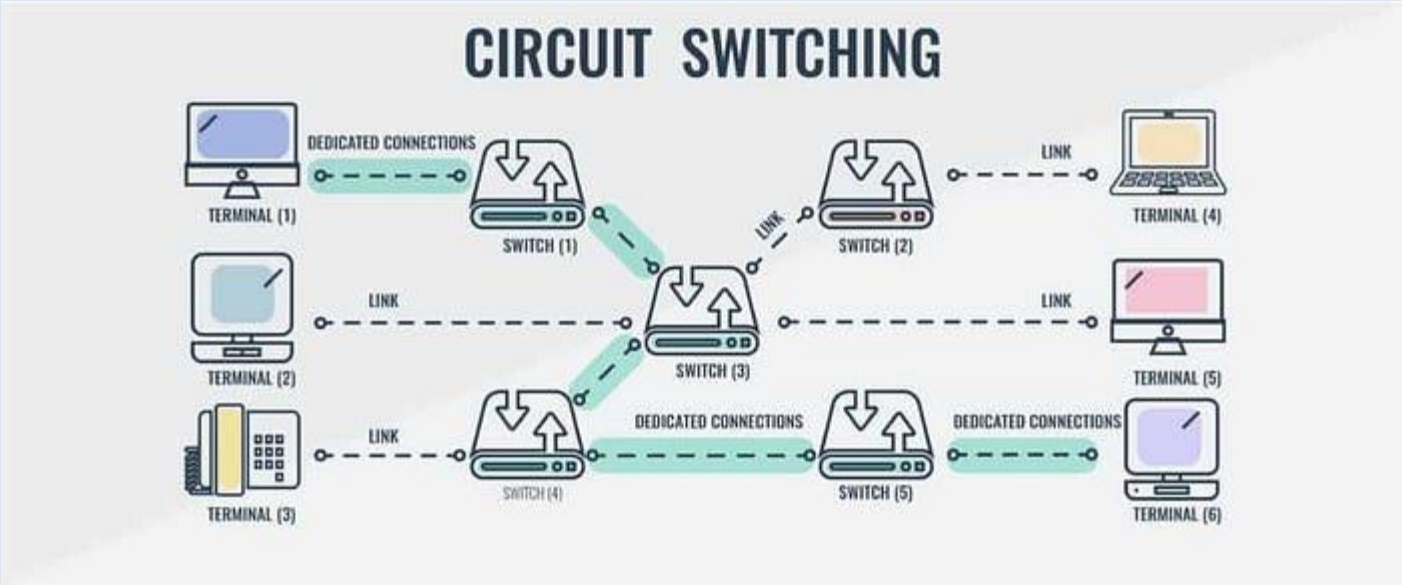

https://www.codingninjas.com/studio/library/switching-in-computer-networks

Circuit Switching

Advantage

- No delay in receiving the data and therefore no jitter
- Once the connection has been made, data is transmitted at a constant rate.

Disadvantage

- In a dedicated network, when data is not being transmitted through a point-to-point connection, the connection is not being used and is therefore a wasted resource.
- Such networks are expensive to install over large geographical areas.

Application:

- Developed for voice traffic (phone)

Message-Switching networks

- Message switching invented for telegraphy
- Connectionless - No direct establishment of a dedicated path between the sender and receiver.
- Entire messages multiplexed onto shared lines, stored & forwarded
- Where to send, where is info? **Headers** for source & destination addresses
- Store-and-Forward: Each node receives the messages, stores it until the next device is ready to receive it and then forwards it to the next. Messages forwarded hop-by-hop across network

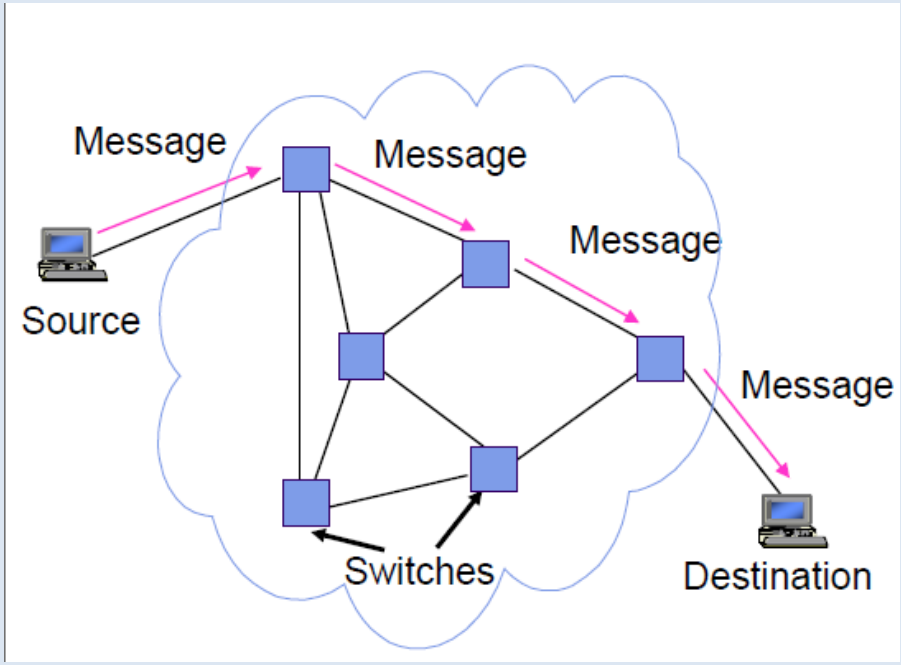

Quality?
Loss of messages may occur when a switch has insufficient buffering to store the message

Message-Switching Networks

Advantages:

a) Efficiency is enhanced because a single channel may now handle several messages.

b) It uses less bandwidth when broadcasting messages, and therefore requires less bandwidth than circuit switching.

c) Message transfer is achievable even if the sender and receiver have different transfer rates.

d) Because of its store and forward capability, it decreases traffic congestion. Any node can be utilized to store the message till the next resources to convey the data become available.

Disadvantages:

i) Because the storing of messages causes a delay, this technology cannot be employed for real-time applications.

ii) Message-switched networks are inherently slow since processing occurs at each and every node, potentially resulting in poor performance.

Packet-Switching Networks

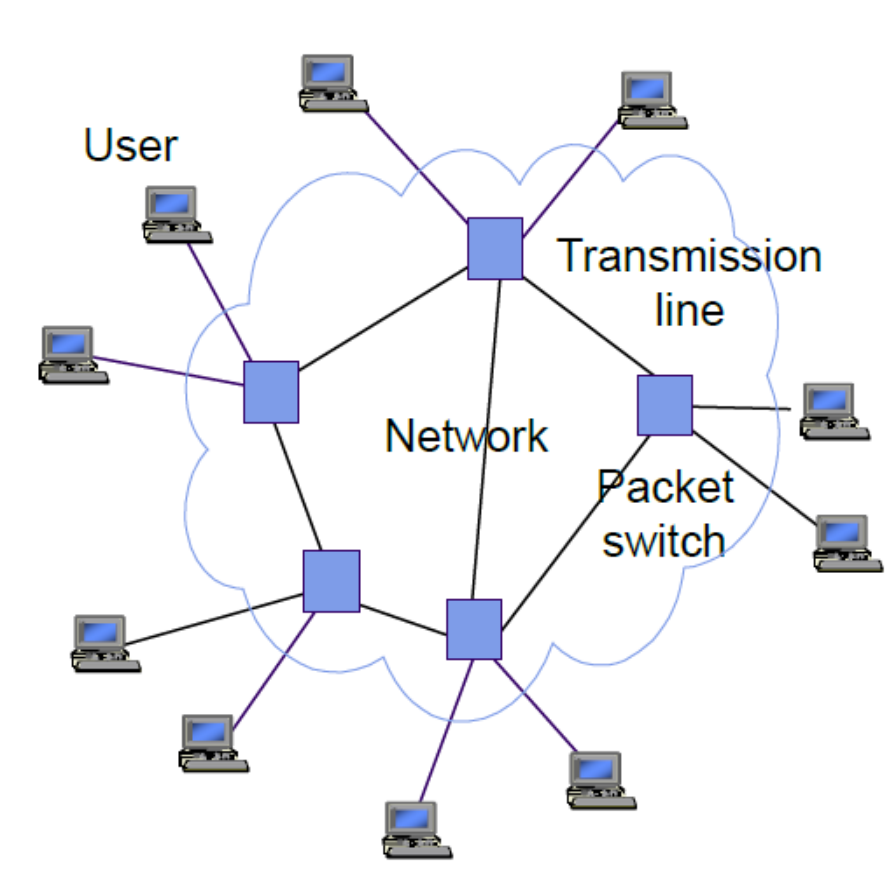

Packet switching network

- Transfers packets between users
- Transmission lines + packet switches (routers)
- Origin in message switching

Two modes of operation:

- **Datagram - Connectionless**
- **Virtual Circuit – Connection Oriented**

Packet Switching- Datagram

- Messages broken into smaller units (packets)
- Source & destination addresses in packet header
- Connectionless, packets routed independently (datagram)
- When a packet arrives at a packet switch, the destination address (and possibly other fields) in the header are examined to determine the next hop in the path to the destination.
- **Pipelining of packets across network can reduce delay, increase throughput**
- Lower delay than message switching, suitable for interactive traffic

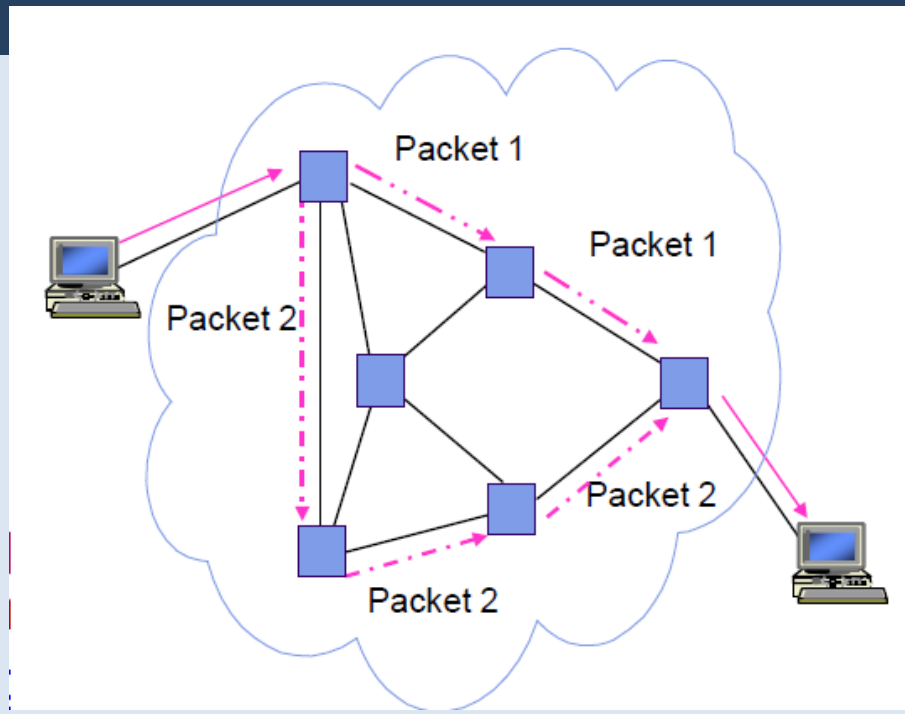

Because each packet is routed independently, packets from the same source to the same destination may traverse different paths through the network as shown in figure. For example, the routes may change in response to a network fault. The packets may arrive out of order, and resequencing may be required at the destination.

Routing Table in Datagram Networks

Destination address	Output port
0785	7
1345	12
1566	6
2458	12

- Route determined by table lookup
- Routing decision involves finding next hop in route to given destination
- Routing table has an entry for each destination specifying output port that leads to next hop
- The result of the lookup is the number of output port to which the packet must be forwarded.
- Size of table becomes impractical for very large number of destinations

Example: Internet Routing

- Internet protocol uses datagram packet switching *across networks*

A packet arrives at a router…Router will do a table lookup of the packet destination address…if address is within its network packet will be forwarded to the appropriate output link…if address is not in the given network router will forward packet to a router of another network (next hop network) after performing suitable encapsulation …i.e. Networks are treated as data links

- Hosts have two-port IP address: **Network address + Host address**

- Routers do **table lookup on network address** This reduces size of routing table

- In addition, network addresses are assigned so that they can also be aggregated

Packet Switching – Virtual Circuit

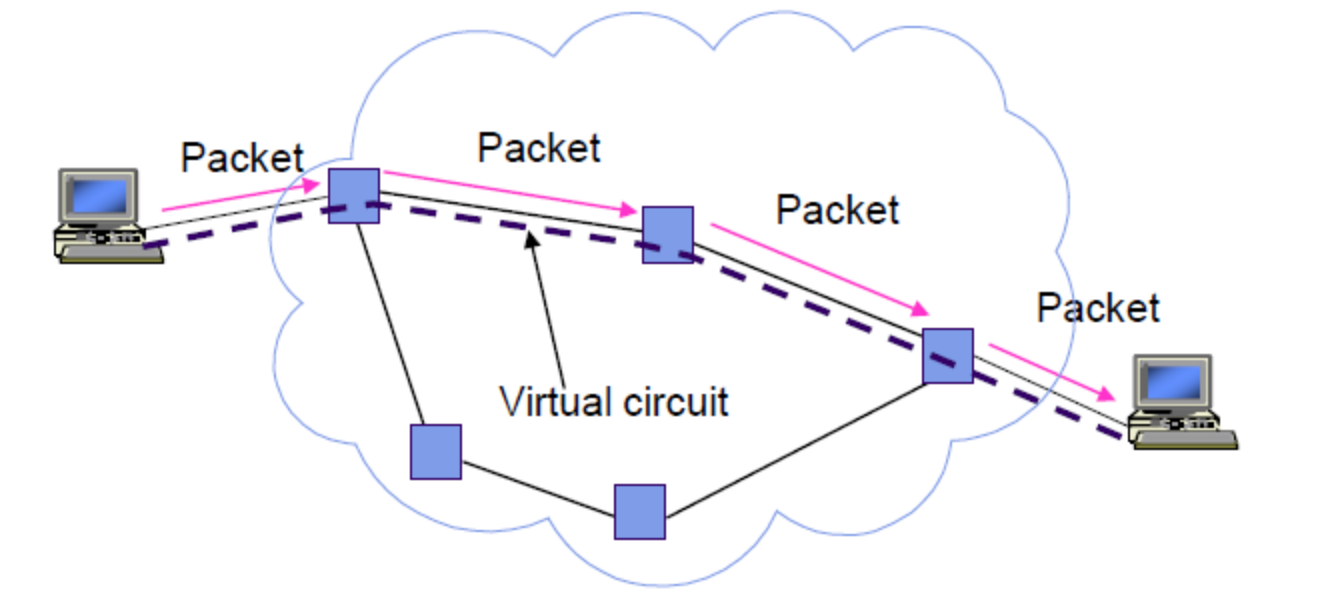

- All packets for a connection follow the same path
- Abbreviated header identifies connection on each link
- Packets queue for transmission
- Variable bit rates possible, negotiated during call set-up
- Delays variable, cannot be less than circuit switching
- Disadvantage- When a fault occurs in the network, all affected connections must be setup again

Connection Setup in Virtual Circuit

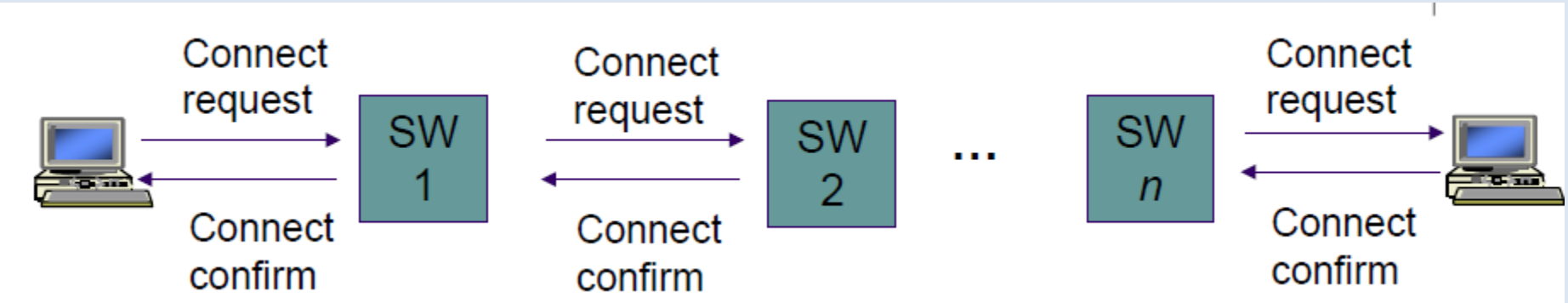

- **Signaling** messages propagate as route is selected
- Signaling messages identify connection and set up tables in switches
- Typically a connection is identified by a local tag, Virtual Circuit Identifier (VCI)
- Each switch only needs to know how to relate an incoming tag in one input to an outgoing tag in the corresponding output
- Once tables are set, packets can flow along path

Virtual Circuit Forwarding Tables

Input VCI	Output port	Output VCI
12	13	44
15	15	23
27	13	16
58	7	34

- Each input port of packet switch has a forwarding table
- Lookup entry for VCI of incoming packet
- Determine output port (next hop) and insert VCI for next link
- Very high speeds are possible
- Table can also include priority or other information about how packet should be treated

Comparison between Datagram and Virtual Circuit

- In datagram packet switching, each packet must contain the full address of the source destination. In large networks, these address can require a large number of bits and result in significant packet overhead and hence wasted transmission bandwidth. One advantage of virtual-circuit packet switching is that abbreviated headers can be used.
- Virtual-circuit switching does a table lookup and immediately forwards the packet to the output port; connectionless packet switching traditionally was much slower because it required software processing of the header before the next hop in the route could be determined. (This situation has changed with the development of hardware-based routing techniques.)
- Virtual-circuit packet switching does have disadvantages relative to the datagram approach. The switches in the network need to maintain information about the flows they are handling. The amount of required "state" information grows very quickly with the number of flows.

Example: ATM Networks

- All information mapped into short fixed-length packets called *cells*
- Connections set up across network
  - Virtual circuits established across networks
  - Tables setup at ATM switches

- Several types of network services offered
  - Constant bit rate connections
  - Variable bit rate connections

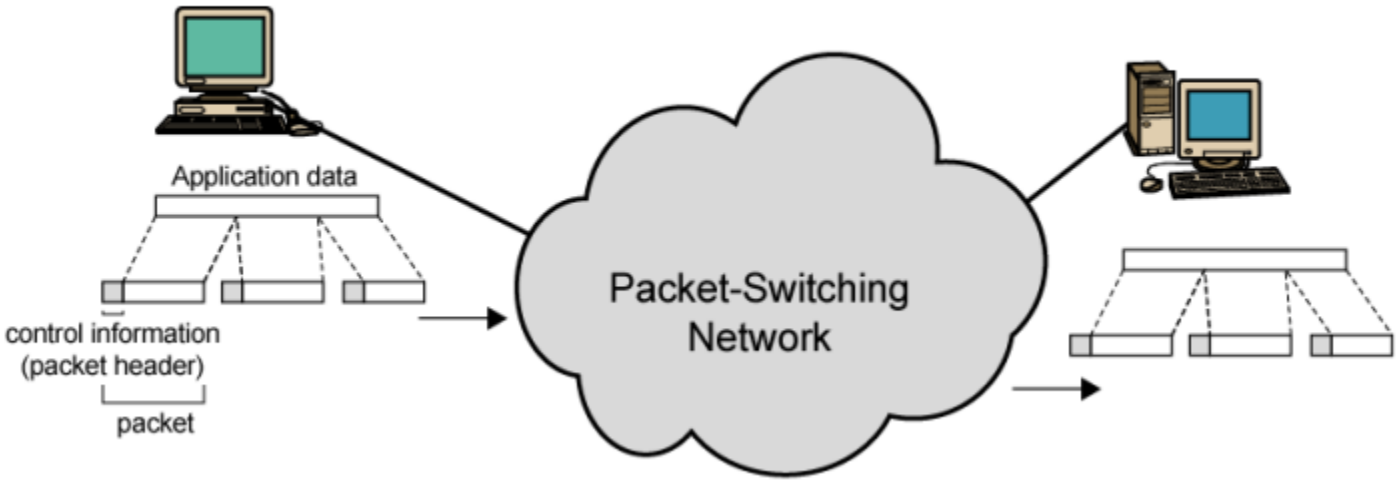

Advantages

- Line efficiency
  - Single node to node link can be shared by many packets over time
  - Packets queued and transmitted as fast as possible
- Data rate conversion
  - Each station connects to the local node at its own speed
  - Nodes buffer data if required to equalize rates
- Packets are accepted even when network is busy
  - Delivery may slow down
- Priorities can be used

Internet: Packet Switching

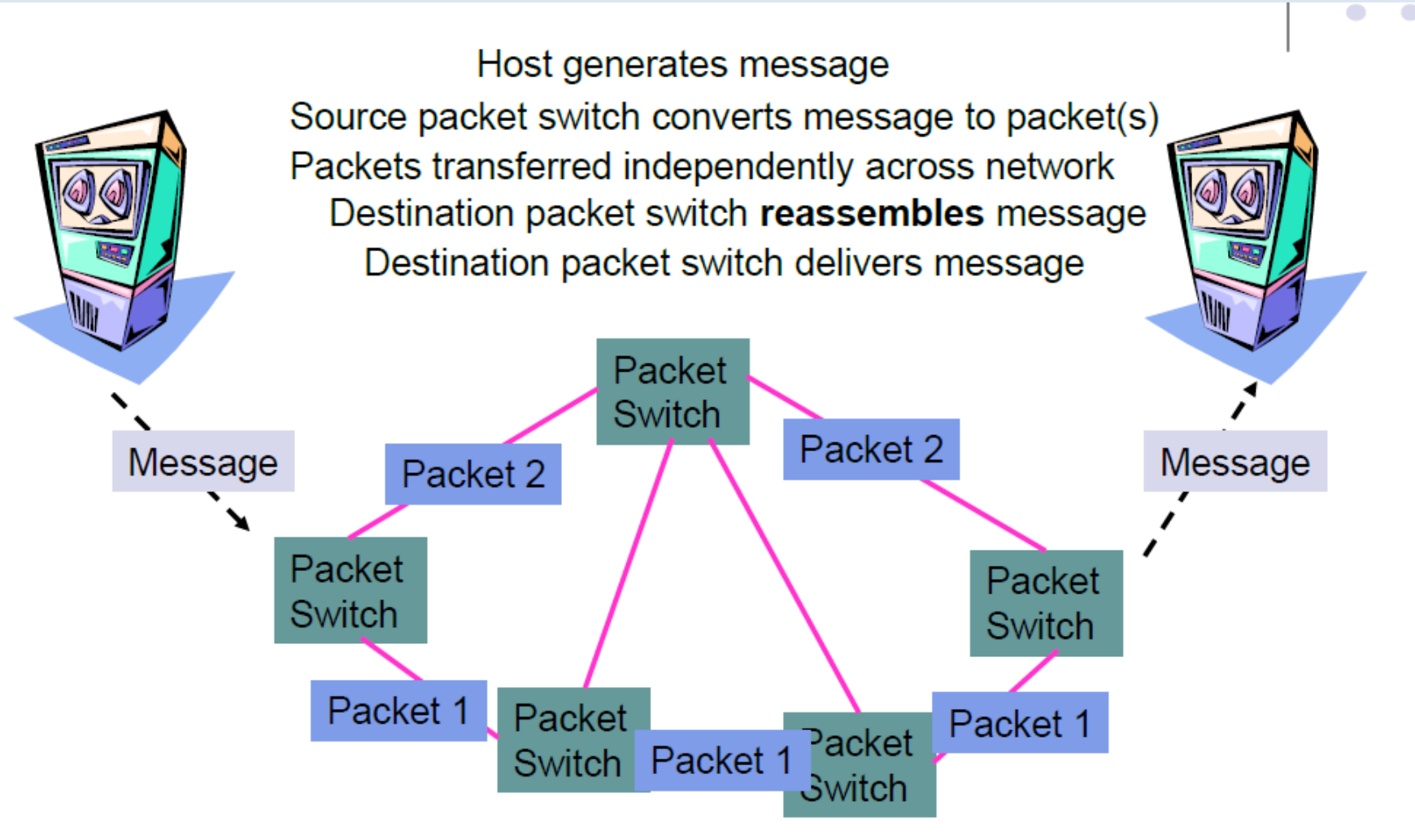

Other Internet Features

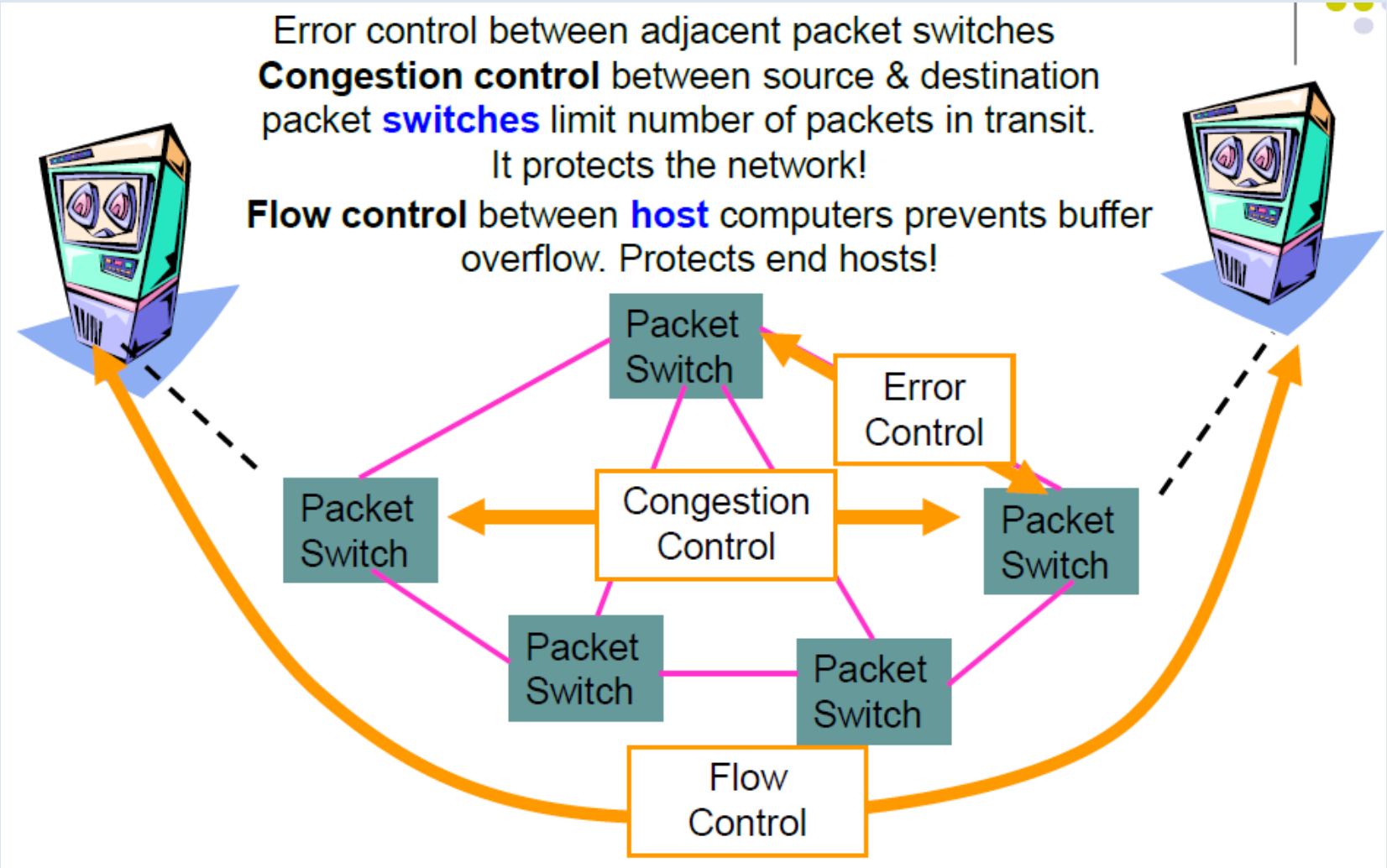

Private Branch Exchange PBX

- The PBX is a private telephony switch, allowing the owner (which may be an organization or any kind) to act like a mini-service provider for its users, while, normally providing many additionally features, such as call transfer, call-waiting, IVR (Interactive Voice Response).
- As the organization is the owner of the PBX, it is not being charged for internal calls (calls between extensions that are both registered on the PBX), though, based on the type of service, it may charge for such calls (such as in the case of a business center providing telephony services to the tenant-businesses).
- The phone handsets in any business or other organization are almost never connected directly to the PSTN (Public Switched Telephony Network), but rather to the local PBX which provides it with dial-tone and all its features.
- Before PBXs were computerized, the attendant manually connected both the caller and the person being called by physically inserting a cord.
- PABX is simply automatic version of PBX. The PABX is also faster with data communication, and can handle more telephone calls at the same time.

PBX

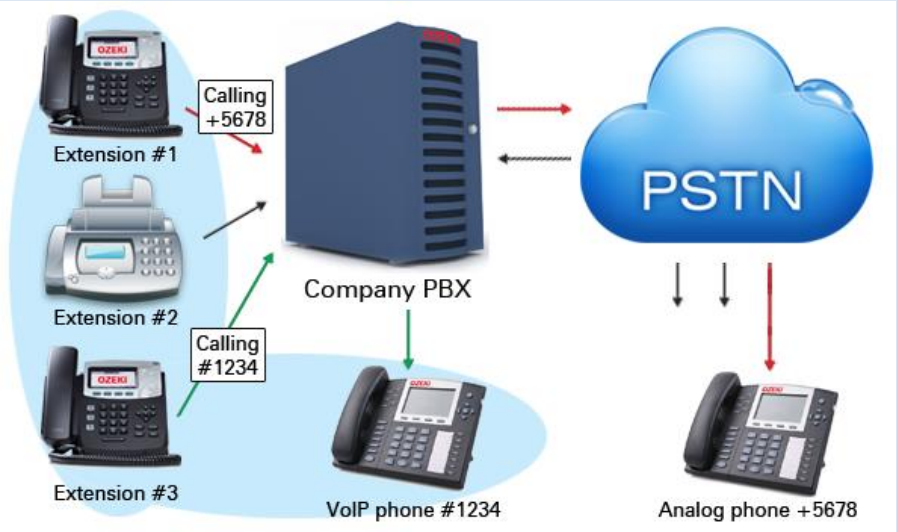

https://voip-sip-sdk.com/p_7246-company-pbx.html

- PBX connects internal phones of an organization together and also connects these phones to the PSTN (Public Switched Telephone Network) over trunk lines

PBX

Advantages

- No rewiring necessary
- Not geographically limited
- Provides gateway access to public and private data networks
- Any extension user can be equipped to transmit data traffic.

Disadvantages

- Limited Transmission Bandwidth
- PBX failure could be catastrophic if a large proportion of all voice and data traffic are reliant on it.
- High cost per port for voice and data, especially if only a limited number of data users.
- PBX is perceived as a telecommunications and not a data processing facility.